Journal of
Instrumentation

OPEN ACCESS

Detector control systems and monitoring of the High Granularity Calorimeter for the upgrade of CMS

To cite this article: M. Toms *et al* 2026 *JINST* **21** C03029

View the article online for updates and enhancements.

You may also like

- Preparing the hardware of the CMS Electromagnetic Calorimeter control and safety systems for LHC Run 2
O. Holme, P. Adzic, D. Di Calafiori et al.

- Sensors for the CMS High Granularity Calorimeter
A.A. Maier

- Validation of the SiPM-on-Tile readout chain for the CMS High Granularity Calorimeter
F. Hummer and the CMS HGCAL collaboration

This content was downloaded from IP address 94.31.72.251 on 16/10/2026 at 09:33

Published by IOP Publishing for Sissa Medialab

Received: *November 30, 2025*
Accepted: *February 24, 2026*
Published: *March 18, 2026*

17th Topical Seminar on Innovative Particle and Radiation Detectors
Siena, Italy
15–19 September 2025

Detector control systems and monitoring of the High Granularity Calorimeter for the upgrade of CMS

M. Toms,[a,*] **M. Klute**,[a] **C. Taysi**,[b] **K. Yaz**,[c] **O.B. Kolcu**,[d] **E. Simsek**,[e,b] **E. Iren**,[f] **N. Parmar**,[g] **L. Cokic**[h] **and A. Tsirou**[i] **on behalf of the CMS collaboration**

[a] *Karlsruhe Institute of Technology, Institute of Experimental Particle Physics (ETP), Campus Nord, Geb. 401, Hermann-von-Helmholtz-Platz 1, 76344 Eggenstein-Leopoldshafen, Germany*
[b] *Yildiz Technical University, Davutpaşa Mah. Davutpaşa Caddesi 34220, Esenler/İstanbul, Türkiye*
[c] *Turkish German University, Sahinkaya Caddesi 34820, Beykoz/İstanbul, Türkiye*
[d] *Istinye University, 34010, Sarıyer/İstanbul, Türkiye*
[e] *Physics Department, Bogazici University, Istanbul 34342, Türkiye*
[f] *Mimar Sinan Fine Arts University, 34380, Sisli/İstanbul, Türkiye*
[g] *University of Rochester, 500 Joseph C. Wilson Blvd. Rochester, NY 14627, U.S.A.*
[h] *CERN, Espl. des Particules 1, 1217 Genève, Switzerland*
[i] *National and Kapodistrian University of Athens, Panepistimiopolis, 15771 Ilissia, Greece*

E-mail: maria.toms@kit.edu

Abstract: The CMS experiment at the LHC is building a new High-Granularity Calorimeter (HGCAL), based on silicon sensors and scintillator tiles read out by SiPMs, as part of the CMS detector Phase-2 upgrade. Silicon modules and SiPM-on-tile boards are integrated into cassettes prior to their insertion into the endcap structure. After assembly, the cassettes must be tested under cold conditions using cosmic muons. Cold operation of the cassettes inside specially designed cold boxes requires fully functional Detector Control Systems (DCS) and Subdetector Environmental Protection (SEP) systems. The objective is to provide operators with a convenient and reliable way to control and monitor a large number of hardware components, both inside and outside the cold box, while ensuring the safety of personnel and detector equipment. The experience gained from the development and practical operation of such systems at the Cassette Assembly Facility (CAF) at CERN will inform the design of control and protection systems for the final HGCAL detector at CMS. This paper presents the design of the control and protection systems for the HGCAL CAF at CERN, along with progress on their development, testing, and operation.

Keywords: Calorimeters; Detector control systems (detector and experiment monitoring and slow-control systems, architecture, hardware, algorithms, databases)

*Corresponding author.

© 2026 The Author(s). Published by IOP Publishing Ltd on behalf of Sissa Medialab. Original content from this work may be used under the terms of the Creative Commons Attribution 4.0 licence. Any further distribution of this work must maintain attribution to the author(s) and the title of the work, journal citation and DOI.

https://doi.org/10.1088/1748-0221/21/03/C03029

2026 JINST 21 C03029

Contents

1 Introduction 1

2 Introduction to control and safety systems 2

3 Overview of HGCAL safety system 3

4 Overview of HGCAL control system 4

5 HGCAL DCS progress 5

6 The HGCAL DCS and SEP current and future tests 7

7 Conclusion 9

1 Introduction

The Compact Muon Solenoid (CMS) [1] is one of the two general purpose detectors at the large hadron collider (LHC) at CERN. The High Granularity Calorimeter (HGCAL) is part of the CMS Phase 2 upgrade, which is replacing endcap parts of electromagnetic and hadron calorimeters during Long Shutdown 3 (LS3). The new calorimeter endcap should be in operation by the beginning of Hi-Lumi LHC era, currently planned to start in 2030.

The new calorimeter endcap is a sampling calorimeter based on silicon 8-inch Si-wafers detectors and Silicon Photo-Multiplier(SiPM)-on-scintillator-tiles active planes. It consists of electromagnetic (CE-E) and hadronic part (CE-H). Hexagonal silicon sensors are used in all CE-E and in high particle fluence areas of CE-H, and SiPM-on-scintillator-tiles are used in outer regions of CE-H, see figure 1. The total number of readout channels amounts to 6.4 million, out of which 280 thousands are SiPM-on-tile and the rest are silicon sensor channels. See the details on number of layers, low voltage (LV) and bias voltage (BV) channels in table 1. The whole HGCAL volume is cooled with CO2 down to the operation temperature of −35°C.

Table 1. HGCAL in numbers.

	CE-E	CE-H
Sensors	Silicon pad sensors	SiPM-on-tile
Absorber	Pb/CuW/Cu	Steel
Layers	26	21
LV channels	2000	2000 Si and 1700 SiPM
BV channels	3800	1700 Si and 3000 SiPM

Mechanically, HGCAL layers consist of cassettes — 30° and 60° sectors in CE-H and CE-E, respectively — which combine a cooling plate also serving as mechanical support and active sensors

2026 JINST 21 C03029

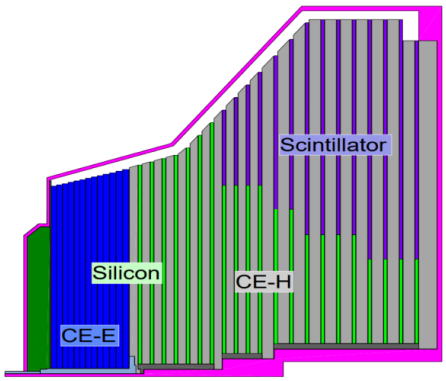

Figure 1. Longitudinal cross-section of the upper half of one calorimeter endcaps.

with electronics attached to them, see figure 2. More details can be found in the HGCAL technical design report [2].

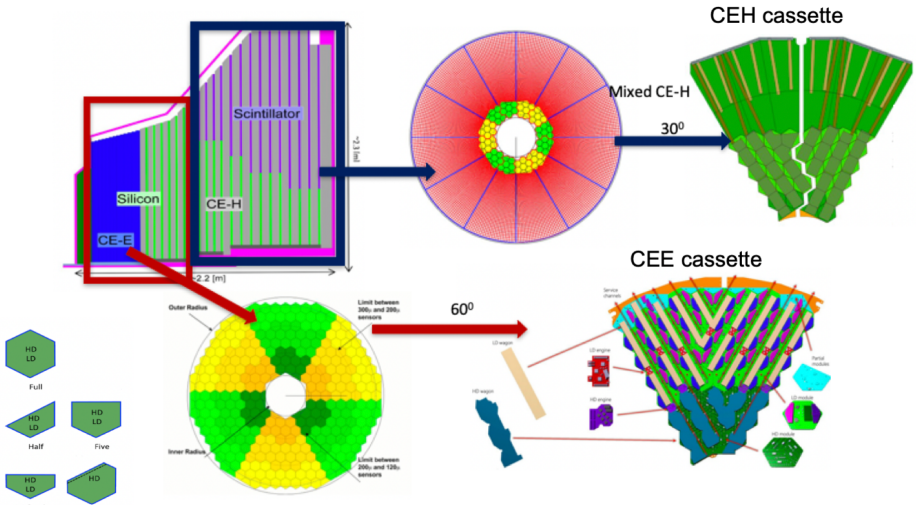

Figure 2. HGCAL layers and cassettes.

2 Introduction to control and safety systems

The HGCAL detector will be operated at $T = -35°\mathrm{C}$ and harsh Hi-Lumi LHC radiation conditions. Once installed, physical access to most of detector hardware is lost until its end of life. Therefore detector monitoring data should be collected and presented in a way that is sufficient to diagnose the issues as early as possible and take corrective actions when required.

Detector control and safety systems must work together to keep the detector safe by continuously monitoring the detector state and environment, executing automatic protective actions and alerting operators in case of issues in the detector itself, its environment or infrastructure.

Detector control system should also provide operators with a convenient way to change between power states, operation modes, as well as to visualize the current state of detector and access historic values of relevant parameters.

2026 JINST 21 C03029

Overall structure and interconnection of HGCAL control and safety systems with detector electronics, infrastructure and other services is shown in figure 3.

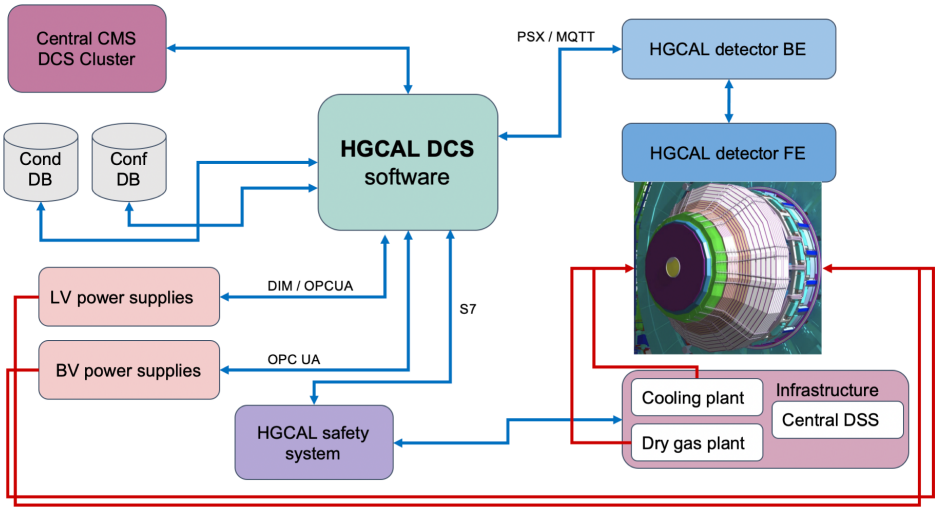

Figure 3. HGCAL control and safety systems architecture.

Detector control system (DCS) is a software used to control and monitor the power to the detector, visualize and monitor the detector state and connect to the databases to store the detector conditions (Cond DB) hardware configuration, e.g. power supplies, and software configurations for different operation modes (Conf DB).

Detector front-end (FE) is on-detector electronics receiving analog signals from the detector and converting them to digital and optical signals. Detector back-end (BE) is off-detector electronics receiving optical signals from FE, combining them and sending to central DAQ and Trigger systems. The back-end also sends control commands down to the front-end ASICs such as HGCROCs, ECON-D and ECON-T and lpGBTs. Both detector FE and BE are monitored in HGCAL DCS.

3 Overview of HGCAL safety system

The HGCAL safety system is based on programmable logic controller (PLC) devices. For the subdetector environmental protection (SEP) PLC, the model chosen is SIMATIC S7-1500 by Siemens.

The SEP PLC collects environmental data from detector volume, mainly temperatures of the cooling plates. Based on the programmed Alarm-Action-Matrix it can interlock the power supply to the detector or its parts in case of overheating or other issues.

The monitor PLC is constantly checking the infrastructure status: dry air and cooling plants availability and status. Whenever there is a problem with detector dry gas or cooling, the alarm is raised to the Master PLC.

The master PLC is receiving inputs from SEP, Monitor PLCs and CMS Detector Safety System (DSS) PLC. Master PCL is deciding whether the power and cooling to the detector can be enabled or not, depending on the states of detector and infrastructure, received from other PLCs. See the flow of inputs and outputs and interconnection between PLCs, detector and infrastructures in figure 4.

2026 JINST 21 C03029

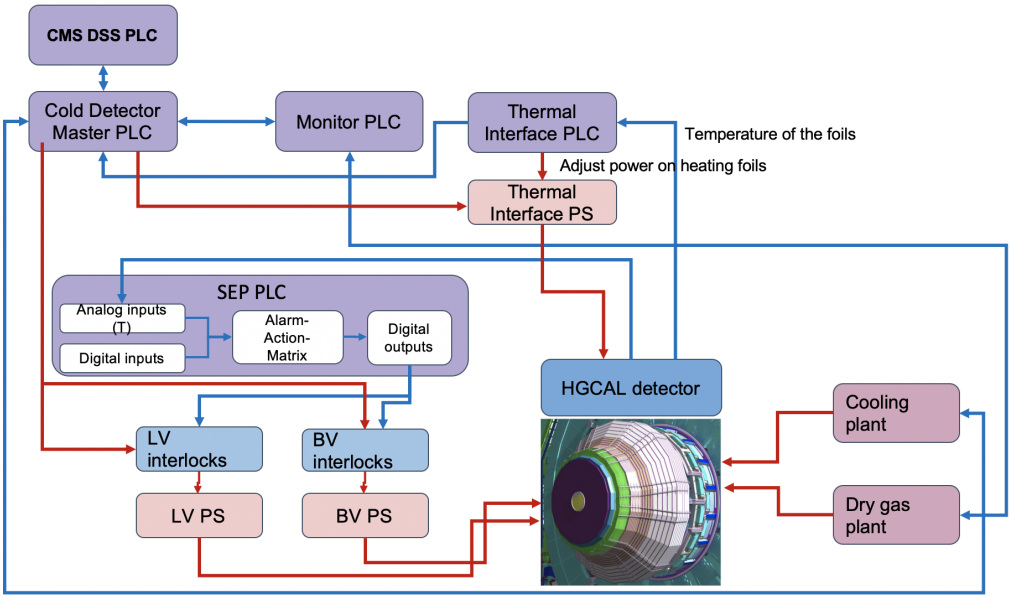

Figure 4. HGCAL safety system overview.

4 Overview of HGCAL control system

The HGCAL control system is based on WinCC OA, which is a SCADA and HMI system by Siemens.[1] In addition, common tools from JCOP and CMS frameworks are used wherever possible.[2] It has a modular structure: several "components" are responsible for different functionalities in order to simplify maintenance and simultaneous development of its separate parts. The interdependence of components is kept to minimum from the development stage with the same considerations in mind. One component can also be used in several setups or projects, as they are designed to be configurable via Conf DB. The overall structure is shown in figure 5.

The very essential parts are the LV and BV control components, which together with finite state machine component provide a convenient way to supply power to the whole detector or its partitions. Visualization of the detector state is crucial for the safety aspect, e.g. when the operator needs to understand quickly which parts are ON or OFF. It is also very useful for troubleshooting, as the physical location of the problematic region might be suggestive of the underlying issue. For example, it often happens that granularity of LV, BV supply and clock distribution are different and seeing the pattern of misbehaving detector parts helps to discern quickly between those three possible causes of issues.

The interface to the safety system is connecting to the safety system hardware and helps the operator to visualize its state in a convenient way. It also gives the possibility to configure some of its parameters, like sensor alarm thresholds or the list of masked sensors.

The interfaces to the FE and BE are the components which aggregate the large amount of monitoring data received from the detector electronics and make it available to the operator, for instance through the detector visualization component.

[1] Supervisory control and data aquisition and human-machine interface.

[2] CERN Joint COntrols Project is a collaborative effort between LHC experiments and several CERN groups to develop control systems for the CERN experiments in common.

2026 JINST 21 C03029

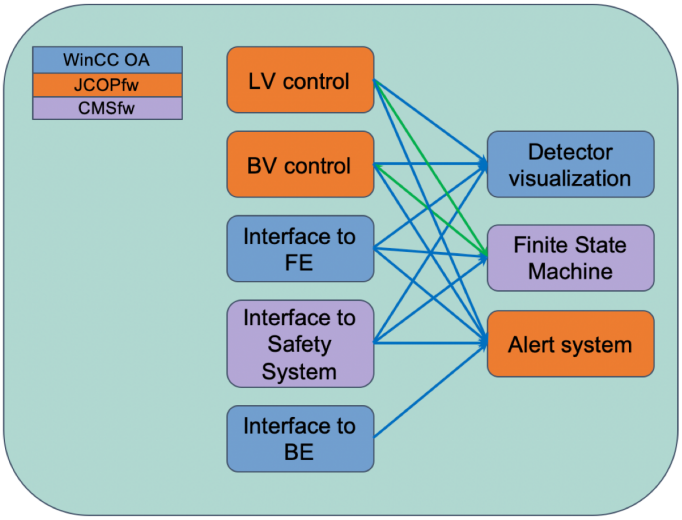

Figure 5. Components of the HGCAL control system.

The alert system component collects the critical data from all above mentioned components and produces alarms for the operators, which are then visible on the alarm screen in the control room and/or sent to the detector experts by email or SMS.

5 HGCAL DCS progress

HGCAL is using a new type of LV power supplies called Wiener MaRaPOD. The first test of those power supplies, including the powering of test setups were performed before the official JCOP framework components were available. In order to control those power supplies conveniently from a WinCC OA application, we developed a private DIM(Distributed Information Management)-based server and a corresponding WinCC OA component including a graphical user interface (GUI) and configuration tools, see figure 6. Recently, an official Open Platform Communications United Architecture (OPC UA) server has been released and the initial tests by the HGCAL DCS group were successful. Both options now work well with prototype and pre-production MaRaPOD modules, however the JCOP component is still under development, so HGCAL continues to use the privately developed DIM solution.

As for the BV control, DCS software tested for available BV power supply options for test-stands and development will continue when the power supplies for the final detector become available.

For the cassette state visualization it was decided to use realistic detector geometry and show each hexagonal silicon module and SiPM-on-tile board on cassettes GUIs individually. The information to be shown on the cassette GUI includes: LV and BV state of individual modules or boards, FE communication state, cooling plate temperature and silicon module or SiPM-on-tile board temperatures measured by FE electronics. Currently, the power state visualization is completed and information on temperatures and FE communication is still to be included. GUIs for both CE-E and CE-H parts are prepared, see figure 8 and compare to a photo of pre-series cassette from layer 25 on figure 7.

2026 JINST 21 C03029

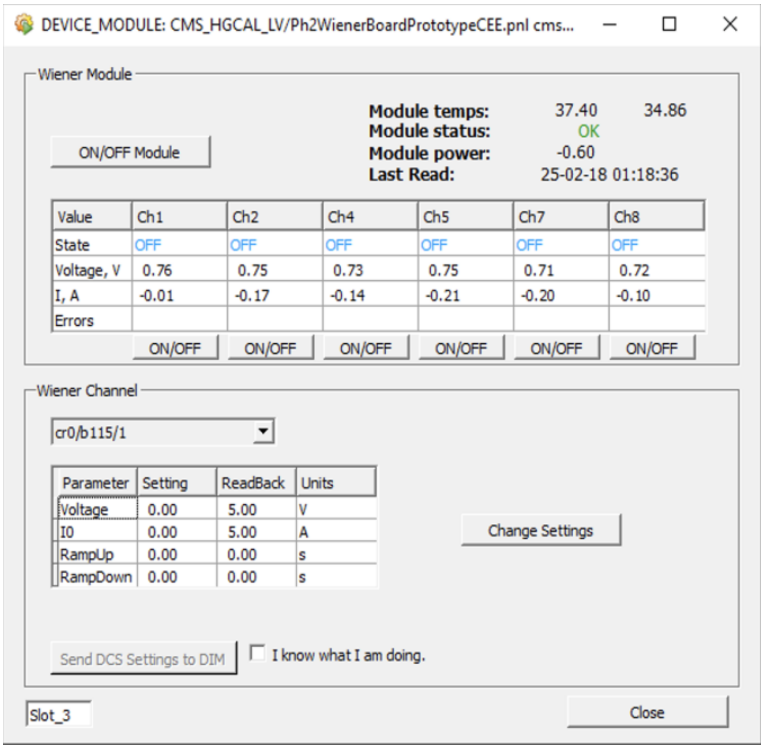

Figure 6. HGCAL low voltage power supply control GUI.

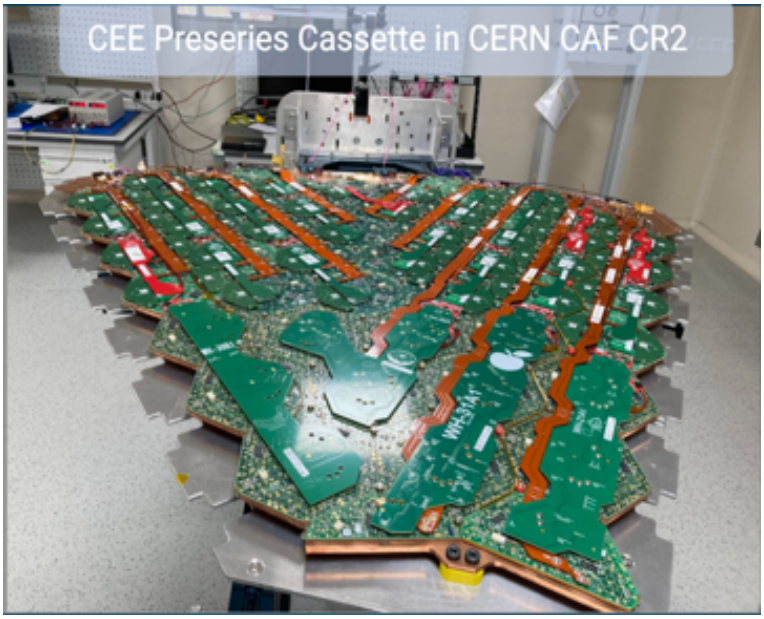

Figure 7. The HGCAL pre-series cassette assembled at CERN.

The interface to the safety system is also under development, but significant progress has been achieved. The HGCAL-specific GUIs and utility libraries are prepared, see the GUI examples in figure 10.

2026 JINST 21 C03029

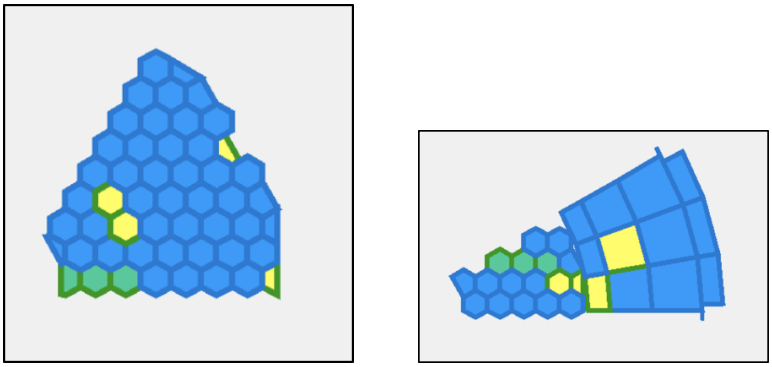

Figure 8. The HGCAL CE-E and CE-H cassette DCS GUI examples.

The interface to the BE to monitor the ATCA crates exists in ATLAS DCS. The HGCAL DCS group is currently evaluating whether it is possible to reuse that component or whether there is need for a new component for HGCAL-only or CMS-wide use.

Regarding the interface to the FE, it will be implemented using Message Queuing Telemetry Transport (MQTT) protocol or WinCCX, initial tests of both options are still to be performed.

6 The HGCAL DCS and SEP current and future tests

A small-scale DCS and safety system is prepared for electronics system tests, both for CE-E and CE-H parts. The first developed and tested prototype of FSM can be included in larger scale FSM trees. So far the feedback received on the user-friendliness and available features was quite positive. The setup and the corresponding GUI are shown in figure 9.

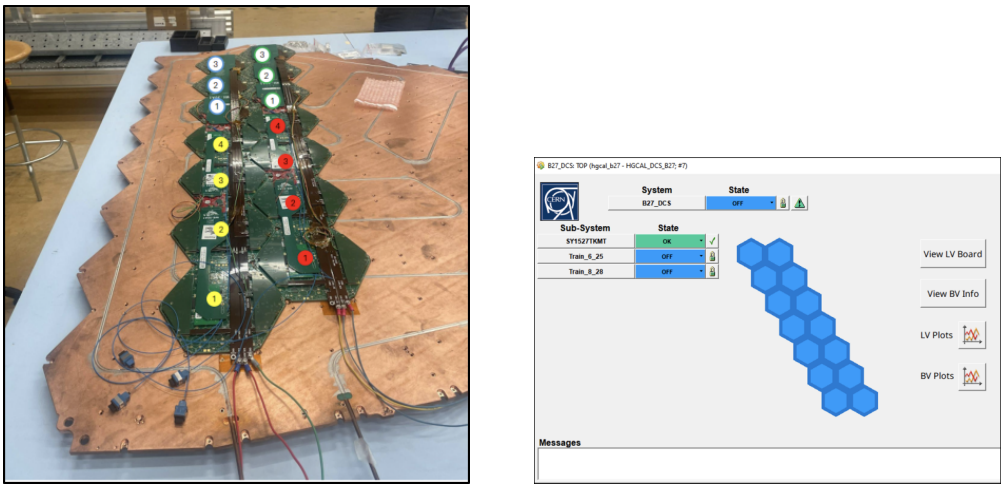

Figure 9. HGCAL electronics test setup (left) and its DCS GUI (right).

A mid-scale safety system for cassettes cold tests at CERN CAF (Cassette Assembly Facility) is in preparation, see right side of figure 10. The DCS interface to the safety system is prepared for this setup, its GUI is shown in the left side of figure 10. LV and BV control components required for these tests are prepared as well.

2026 JINST 21 C03029

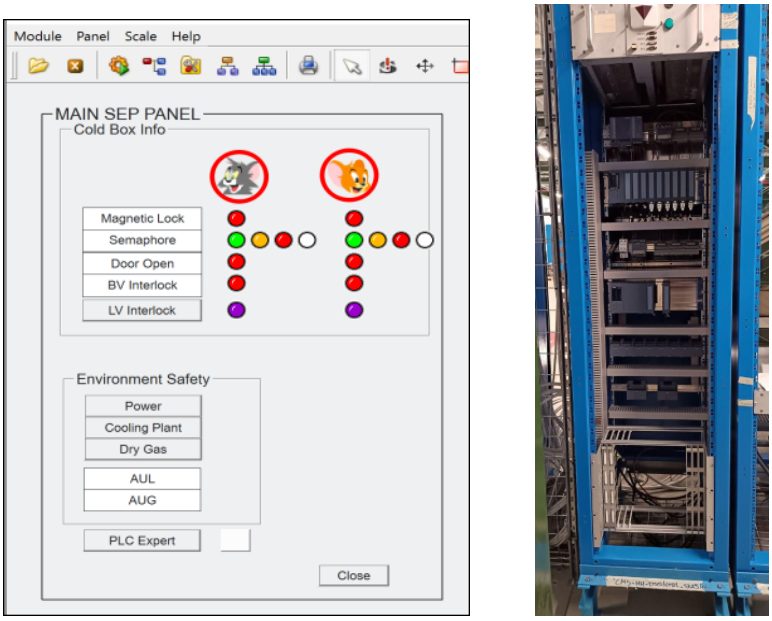

Figure 10. HGCAL safety system interface GUI for cassette assembly facility at CERN (left) and the rack containing the PLC hardware of this safety system (right).

In the beginning of 2026 HGCAL plans to test the fully assembled Thermal Interface (TI), see left side of figure 11. The DCS interface to the TI PLC needs to be developed, as well as the monitoring system for the TI power supplies.

In the first half of 2027 HGCAL is planning to start warm and cold tests of the HGCAL endcaps 1 and 2 before lowering them down to CMS experimental cavern one year later. One of the six sectors of the HGCAL endcap will be cooled down with 2-phase CO2 cooling and powered ON, while the rest stay warm and OFF, as shown in the right part of figure 11. Then this process is repeated until all 6 sectors of both endcaps are tested. Full scale DCS and safety system therefore need to be ready by the beginning of 2027.

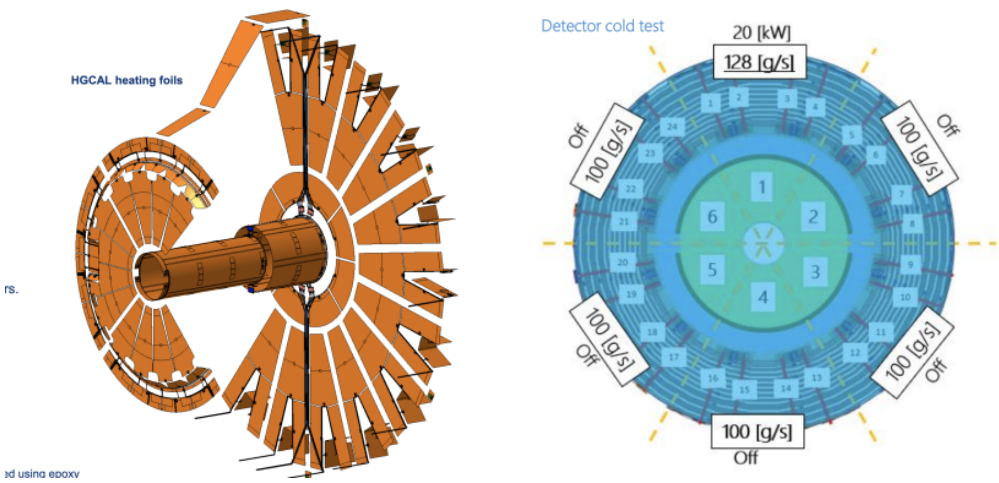

Figure 11. The HGCAL thermal interface (left) and sector cold-test idea (right).

2026 JINST 21 C03029

7 Conclusion

In this paper, an introduction to the HGCAL detector was given, underlining its complexity, heterogeneity and extremely high granularity. Then we discussed the concepts, progress and future plans of the HGCAL control and safety systems development. A lot of progress has been made in the past two years, but there are still many steps to go before achieving fully functional and user-friendly control and safety systems for the full HGCAL detector.

Acknowledgments

We would like to express our sincere thanks to the Alexander von Humboldt Foundation (AvH), Germany for providing financial support and the opportunity to present our work at the IPRD conference.

References

[1] CMS collaboration, *The CMS Experiment at the CERN LHC*, 2008 *JINST* **3** S08004.

[2] CMS collaboration, *The Phase-2 Upgrade of the CMS Endcap Calorimeter*, CERN-LHCC-2017-023 (2017).

2026 JINST 21 C03029