Virtualization of Heterogeneous and Adaptive Multi-Core / Multi-Board Systems

Oliver Oey[1], Stephan Werner[1], Diana Göhringer[12*], Andreas Stuckert[2], Jürgen Becker[1], Michael Hübner[13+]
[1]Karlsruhe Institute of Technology (KIT), Karlsruhe, Germany,
[2]Fraunhofer IOSB, Ettlingen, Germany
[3]Ruhr-University Bochum (RUB), Germany
{oliver.oey, stephan.werner, diana.goehringer, becker}@kit.edu, andreas.stuckert@iosb.fraunhofer.de , michael.huebner@rub.de

Abstract:
This paper presents a virtualization approach for heterogeneous adaptive multi-core systems distributed onto several FPGA boards. The virtualization layer consists of an adapted embedded Linux kernel and several special purpose operating systems. The benefits are demonstrated with a complex image processing application.

1. Overview of the system

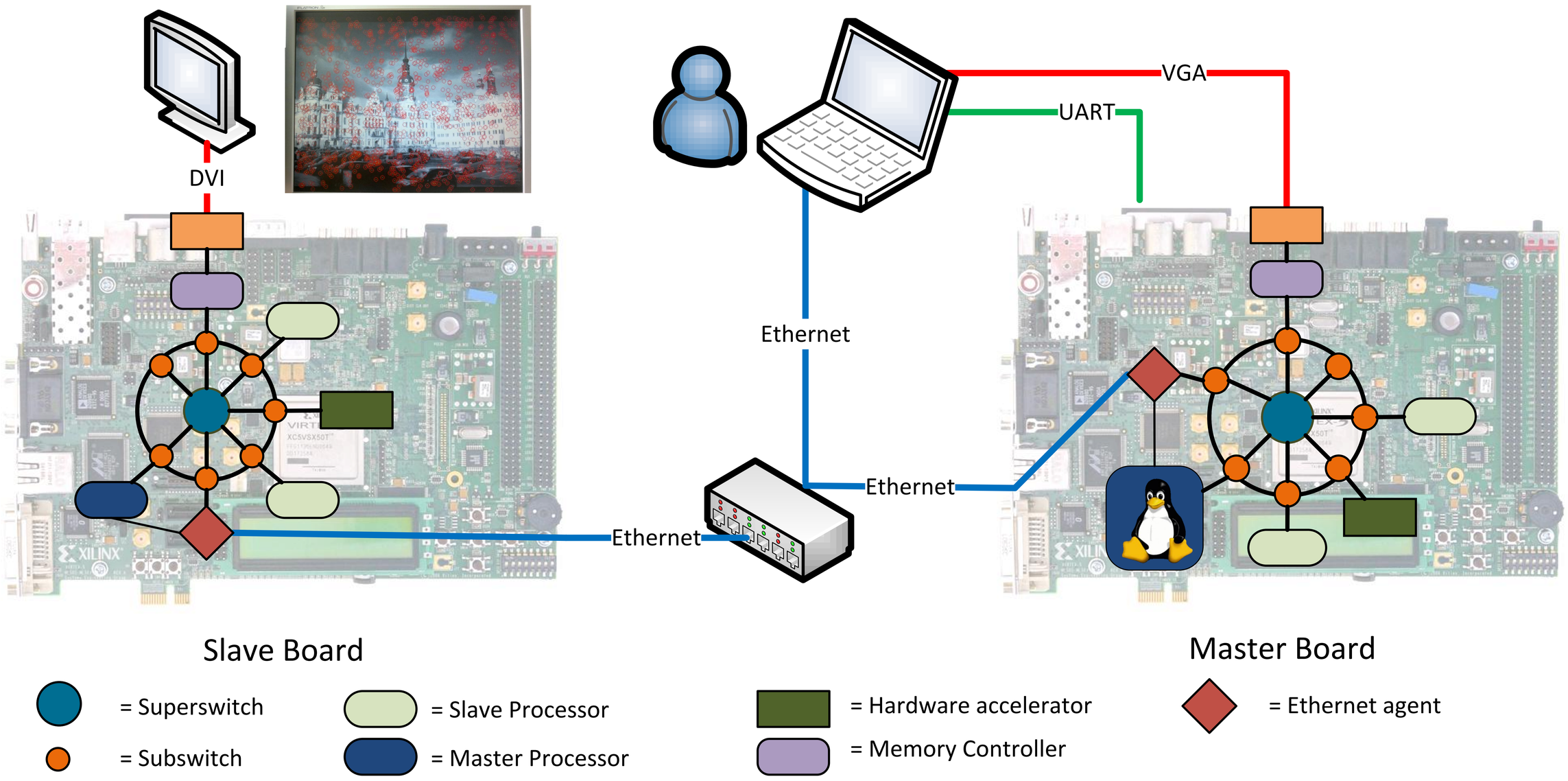

2. From XML to DFG

```xml
<?xml version="1.0" encoding="UTF-8"?>
<root>
      <nodes_count>6</nodes_count>
      <task>
            <ID>0</ID>
            <algo_type>2</algo_type>
            <filename>xml.root</filename>
            <D_global>50</D_global>
            <data>64</data>
            <child>
                  <ID>1</ID>
                  <cost>4</cost>
            </child>
            <child>
                  <ID>2</ID>
                  <cost>4</cost>
            </child>
      </task>
      <task>
            <ID>1</ID>
            <hw_acc>0</hw_acc>
            <algo_type>0</algo_type>
            <exec_time>0</exec_time>
            <D_global>0</D_global>
            <rcfg_time>0</rcfg_time>
      <filename>demo_ub_s1.elf</filename>
            <child>
                  <ID>3</ID>
                  <cost>307200</cost>
            </child>
            <BestN>
                  <ID>3</ID>
                  <cost>307200</cost>
            </BestN>
      </task>
```

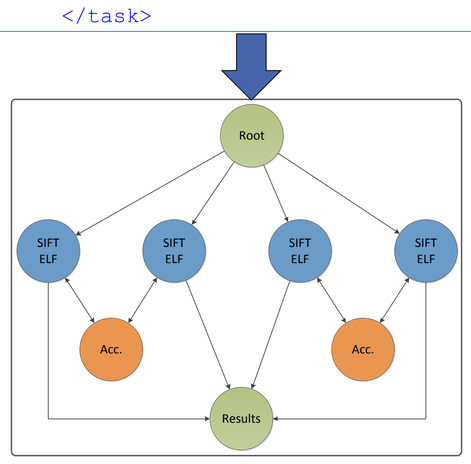

3. Programming the System

3.1 Virtualization Layer

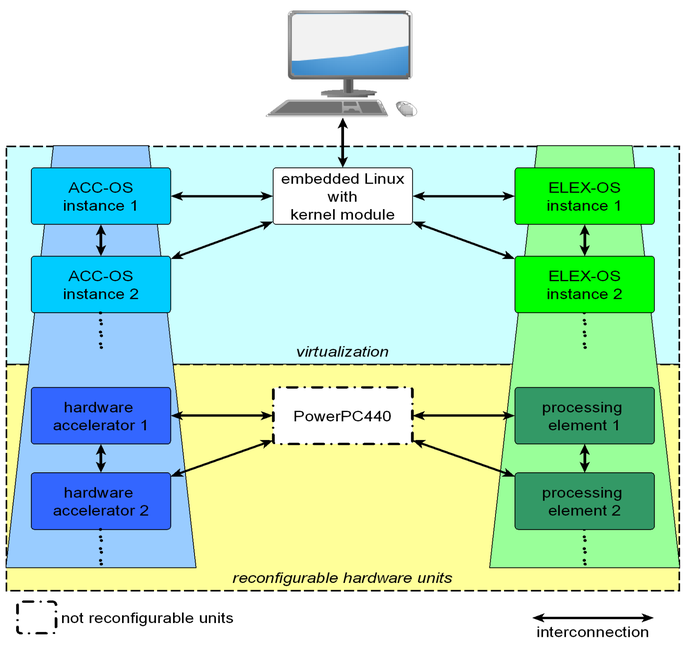

3.2 MPI Program of the Linux Master

```
#include "mpi.h"

int main ( ) {
    unsigned int result = 0;
    unsigned int field[10] = {2,3,4,5,6,7,8,9,10,11};
    unsigned int attr;

    MPI_Init("demo.xml");
    MPI_Send(field, 10, MPI_INT, 0, 0, 0);
    do {
        MPI_Comm_get_attr(0,MPI_FSM_MASTER,&attr,NULL);
    } while ( attr != 0 );
    attr = 0;
    MPI_Comm_set_attr( 0, MPI_FSM_MASTER, &attr );
    MPI_Recv( &result, 1, MPI_INT, 0, 0, 0, 0 );
    MPI_Finalize();

    return 0;
}
```

3.3 FSM of Accelerator

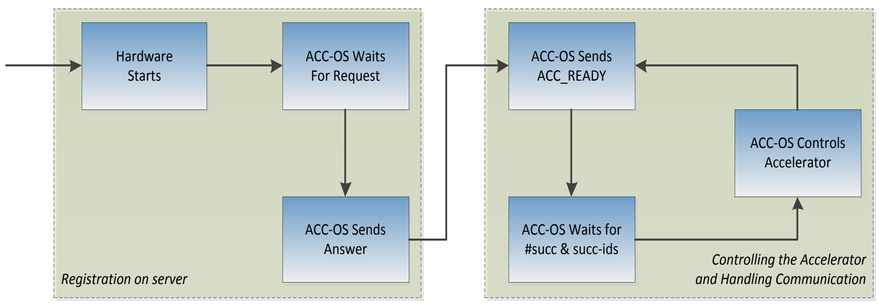

4. SIFT [3]

- Extraction of descriptors for local features in images
- Image is segmented into 40 tiles with a size of 64*120 pixels
- Descriptors are overlaid into the original pictures.

5. Results

Processors	Accelerator	
	without	with
1 Slave CPU	60 sec	58 sec
4 Slave CPUs	24 sec	22 sec

Note: *The accelerator works with more accurate data that is why the performance is almost the same.*

Summary:
- SIFT Algorithm distributed onto 2 FPGA Boards
- Heterogeneous system with processors and hardware accelerators
- Execution controlled by several OSes
- Programming via MPI

References:

[1] D. Göhringer "Flexible Design and Dynamic Utilization of Adaptive Scalable Multi-Core Systems", PhD thesis, 2011, Verlag Dr. Hut München
[2] S. Werner, O. Oey, D. Göhringer, M. Hübner, J. Becker: „Virtualized On-Chip Distributed Computing for Heterogeneous Reconfigurable Multi-Core Systems", DATE 2012, March 2012
[3] D. Göhringer, L. Meder, M. Hübner, J. Becker: „Adaptice Multi-Client Network-on-Chip Memory". ReConFig 2011, Nov./Dec. 2011
[4] D. G. Lowe: "Distinctive Image Features from Scale-Invariant Keypoints". International Journal on Computer Vision, 60, 2, pp. 91-110, 2004

*Diana Göhringer has been at the Fraunhofer IOSB and is now at the Karlsruhe Institute of Technology (KIT)
+Michael Hübner has been at the Karlsruhe Institute of Technology (KIT) and is now at the Ruhr-University of Bochum

This work received financial support by Fraunhofer IOSB, Ettlingen, Germany