KfK 3584
EUR 7987e
August 1983

Conceptual Design of Two Helium Cooled Fusion Blankets (Ceramic and Liquid Breeder) for INTOR

M. Dalle Donne, S. Dorner, S. Taczanowski
Institut für Neutronenphysik und Reaktortechnik
Projekt Kernfusion

Kernforschungszentrum Karlsruhe

KERNFORSCHUNGSZENTRUM KARLSRUHE
Institut für Neutronenphysik und Reaktortechnik
Projekt Kernfusion

KfK 3584
EUR 7987e

Conceptual Design of Two Helium Cooled Fusion Blankets (Ceramic and Liquid Breeder) for INTOR

M. Dalle Donne[+], S. Dorner and S. Taczanowski[++]

[+]Delegated from Euratom to Kernforschungszentrum Karlsruhe, Institut für Neutronenphysik und Reaktortechnik
[++]On leave from the Institute of Physics and Nuclear Techniques, University of Mining and Metallurgy, Cracow, Poland

This work has been performed in the frame of the European Fusion Technology Programme.

Kernforschungszentrum Karlsruhe GmbH, Karlsruhe

Kernforschungszentrum Karlsruhe GmbH
ISSN 0303-4003

Abstract

Neutronic and heat transfer calculations have been performed for two helium cooled blankets for the INTOR design. The neutronic calculations show that the local tritium breeding ratios, both for the ceramic blanket (Li_2SiO_3) and for the liquid blanket ($Li_{17}Pb_{83}$) solutions, are 1.34 for natural tritium and about 1.45 using 30 % Li^6 enrichment.

The heat transfer calculations show that it is possible to cool the divertor section of the torus (heat flux = 1.7 MW/m^2) with helium with an inlet pressure of 52 bar and an inlet temperature of 40 ^oC. The temperature of the back face of the divertor can be kept at 130 ^oC. With helium with the same inlet conditions it is possible to cool the first wall as well (heat flux = 0.136 MW/m^2) and keep the back-face of this wall at a temperature of 120 ^oC.

For the ceramic blanket we use helium with 52 bar inlet pressure and 400 ^oC inlet temperature to ensure sufficiently high temperatures in the breeder material. The maximum temperature in the pressure tubes containing the blanket is 450 ^oC, while the maximum breeder particle temperature is 476 ^oC.

For the cooling of the liquid blanket the helium inlet conditions are 25 bar and 225 ^oC. The resulting maximum temperature of the $Li_{17}Pb_{83}$ breeder is 395 ^oC, while the maximum temperature of the moderator ($ZrH_{1.7}$) is 409 ^oC.

The arrangement proposed for the ceramic blanket with the breeder contained in perforated tubes promises an effective helium mass exchange between the breeder bed and the main helium flow. This, together with the possibility of keeping an extremely low level of impurities in the primary helium circuit, suggests that the tritium inventory in the coolant helium should be very small (of the order of a few grams). If one assumes ceramic particles of 2 mm diameter and a tritium diffusivity in the particles of 10^{-9} cm^2/sec the tritium inventory in the ceramic breeder is about 0.7 kg.

Konzept-Entwürfe für zwei heliumgekühlte Fusionsreaktor-Blankets (Keramik- und Flüssigmetall-Brüter) für INTOR

Zusammenfassung

Neutronenphysikalische und Wärmeübergangsrechnungen wurden für zwei heliumgekühlte Blankets für den INTOR-Entwurf durchgeführt. Die neutronenphysikalischen Rechnungen ergaben, daß die lokale Tritiumbrutrate in beiden Blankets, d. h. für den keramischen (Li_2SiO_3) und den flüssigmetallischen ($Li_{17}Pb_{83}$) Entwurf, mit natürlichem Lithium 1.34 und mit 30 % angereichertem Li^6 etwa 1.45 beträgt.

Die Wärmeübergangsrechnungen zeigen, daß es möglich ist, den Divertorbereich des Torus (Wärmefluß = 1,7 MW/m^2) mit Helium mit einem Eingangsdruck von 52 bar (5,2 MPa) und einer Eingangstemperatur von 40 ^oC zu kühlen. Die Temperatur der Rückseite des Divertors kann bei 130 ^oC gehalten werden. Mit Helium unter gleichen Eingangsbedingungen ist es auch möglich, die erste Wand (Wärmefluß = 0,136 MW/m^2) zu kühlen und die Rückseite dieser Wand bei einer Temperatur von 120 ^oC zu halten.

Für die Kühlung des Blankets mit keramischem Material gingen wir von Helium mit einem Eingangsdruck von 52 bar und einer Eingangstemperatur von 400 ^oC aus, um eine hinreichend hohe Temperatur des Brutmaterials sicherzustellen. Die maximale Temperatur in den Blanket-Druckrohren ist 450 ^oC, während die Maximaltemperatur der Brutpartikel 476 ^oC beträgt.

Bei der Kühlung des Flüssigmetall-Blankets sind die Eingangsbedingungen des Heliums 25 bar und 225 ^oC. Daraus resultiert die Maximaltemperatur des $Li_{17}Pb_{83}$-Brutstoffs von 395 ^oC, während die Maximaltemperatur des Moderators ($ZrH_{1,7}$) 409 ^oC ist.

Der vorgeschlagene Entwurf für das Keramikblanket mit dem Brutstoff in perforierten Rohren verspricht einen effektiven Heliumaustausch zwischen dem Brutstoffbett und dem Hauptheliumfluß.

Dieses und die Möglichkeit, die Verunreinigungen des primären Heliumkreislaufs niedrig zu halten, läßt vermuten, daß das Tritiuminventar im Helium als Kühlmittel äußerst gering sein kann (in der Größenordnung von einigen Gramm). Wenn man Keramikpartikel von 2 mm Durchmesser und eine Tritiumdiffusion in den Partikeln von 10^{-9} cm^2/sec annimmt, dann kommt man zu einem Tritiuminventar im Blanket von rund 0,7 kg.

1. Introduction

The Karlsruhe Nuclear Research Center recently started a research and development program to study the technological problems connected with the design of the blanket of a magnetic confined fusion reactor. In the present work we investigate the possibility of using helium as coolant of the first wall and of the blanket, rather than the proposed light or heavy water. As a basis for our investigations we have taken the INTOR design /1/, which was performed by an international group of experts and which can be considered as typical of the next Tokamak reactor to be built either in Europe or overseas.

The advantage of using helium as a coolant is threefold. First and foremost, the use of helium potentially allows a considerable increase in the tritium breeding ratio, especially if helium is used as a first wall coolant. This is due to the fact that a layer of strong moderator like H_2O or even D_2O placed in the region of high neutron flux deteriorates considerably the neutron balance. The following transfer of some neutrons below the (n,2n) reaction threshold associated with further slowing-down results in a reduced neutron multiplication and increased parasitic neutron captures in the first wall, in the coolant (H_2O), in the structure materials and in the multiplying medium. Liquid metals, except in the inelastic scattering region, do not moderate the neutrons as much as water, but they cannot be used as blanket coolants because they are electricity conducting materials and, due to their movement, produce magnetic fields which unduly disturb the magnetic confinement system. Now, an increase in breeding ratio is extremely important. A fusion reactor should be, if at all possible, self-sustaining as far as tritium is concerned. This is because, not only tritium is extremely expensive, but the tritium large quantities required by a relatively big reactor like INTOR to make up for the tritium inventory in the blanket and in the reprocessing and refabricating system, and especially the tritium burnt by the fusion reactions, are very difficult to obtain in the market, especially in the european countries, which do not have a large military program like the USA or the URSS.

The second reason to use helium as a coolant is that in the case of ceramic breeding materials (Li_2SiO_3, Li_4SiO_4, Li_2O, $LiAlO_2$ and others have been considered) helium is generally used as the tritium purging medium. Thus, if it is possible to unify the cooling and the purging function in a single fluid, the design of the blanket becomes simpler and more reliable.

The third reason in favor of helium as a coolant of a fusion blanket is that it makes the use of a liquid breeder concept ($Li_{17}Pb_{83}$, $LiPb_4Bi_5$ and lithium have been proposed) simpler and safer. Indeed, all these liquid breeders react more or less vigorously with water, while obviously not with helium. Thus, small leakages of the helium coolant into the liquid breeder do not pose then major problems.

However helium is by far inferior to water as a heat transfer and transport medium. This is probably the reason why it has not been proposed so far as a cooling medium of the first wall and of the blanket of INTOR. A fusion reactor with helium cooling in the blanket, however with water cooling for the first wall, has been proposed in the past by General Atomic /2/. The cooling problem of the first wall is of course more difficult than the cooling of the blanket, due to the much higher heat fluxes present at the first wall backface. However helium gives the greatest advantage just as a coolant for the first wall, because the slowing down of the neutrons from the plasma should be reduced as much as possible just in the region between first wall and lead multiplier.

In case of helium cooling for the first wall and the blanket, one should use helium cooling for the other parts of the toroidal chamber inner surface (inboard and divertor sectors) as well, in order to avoid increased neutron losses due to softened spectrum in any region with moderating coolants (H_2O or D_2O) but without breeding medium. An effective helium cooled blanket design requires therefore, that all the surfaces facing the plasma are cooled by helium. In the present paper we will show how it is possible to cool with helium the walls of the INTOR divertor with the highest present heat flux (1.7 MW/m^2), as well as the first wall and blanket on the outboard sector of the torus. Two blanket designs, one with a ceramic breeder and the second one with a liquid breeder have been investigated.

2. Neutronics

The variety of present fusion reactor blanket concepts requires a clear indication for designing an optimum blanket structure on the basis of physical and also technological premisses. Within the severe constraints imposed by technological possibilities, the optimum nuclear design should be identified first, determining, in turn, the objective for technological solutions. A thorough analysis of the physical processes occurring in the blanket and the idea of proper space-energy correlation of the selected cross-sections with the neutron flux, create a reliable basis for defining the guidelines of blanket designing.

2.1 General considerations

The above mentioned concept of neutron flux shaping has been discussed elsewhere /3/ thus only the most important conclusions are to be reminded. The idea can be reduced to the statement that in limited volumes the maximum rate for a given reaction can be obtained when having the neutron flux well peaked at the energy of the maximum of the respective cross-section and situated in the region of maximum concentration of the respective nuclides. In other words, a concentration of neutron flux in this volume with its simultaneous minimization outside this area may assume the best neutron utilization in such circumstances.

In case of maximizing the rate of the $\frac{1}{v}$ type reaction, e.g. the main tritium producing reaction $^{6}Li(n,\alpha)T$, the objective is clear - one should slow-down neutron as intensely as possible. According to earlier suggestions /4/ for the 14 MeV neutrons the two following physical processes are to be used in order to achieve the above goal most effectively:

1) neutron inelastic multiplication processes - (n,xn) - for energies above 1 MeV
2) proton elastic scattering - below this energy

These quite general suggestions in practice signify sometimes a difficult compromise between several competing processes contributing to the maximization of the desired reactions; neutron multiplication/inelastic slowing-down - parasitic absorptions - elastic scattering moderation.

The significance of either process must be evaluated in view of the neutron balance: production - losses (leakage, absorptions).

The rather high thresholds of neutron multiplication reactions (n,xn) make the multiplication rate to be sensitive to the neutron spectrum within the fast region. It signifies that not only the direct absorption processes - (n,p),(n,α) etc. decrease the neutron multiplication but also practically all inelastic scatterings driving neutrons down to energies below those thresholds. Since all the above processes usually dominate at 14 MeV, from the point of view of the neutron multiplication the presence of any other nuclides i.e. the non-gaseous coolant and/or structure materials in the multiplying medium is highly undesirable.

The need and the advantages of the neutron multiplication are obvious, but they can be cancelled by insufficient leakage suppression when proper moderation is lacking, so this question is to be discussed below.

The leakage suppression is important for two reasons. First, for moderate breeder thicknesses - i.e. with the mean chord length equal to only several mean free paths of 14 MeV neutrons, the reduction of leakage by slowing-down can be even more important than the neutron multiplication. Second, the neutron losses due to less than 100% breeding blanket coverage can be diminished by possibly early (i.e. after not many scatterings) neutron capture in the breeding medium, that in turn is to be achieved also by intense moderation. A hydrodynamic model of neutron transport may be helpful in explaining these effects. The action of hydrogen by the slowing-down process and by the following neutron captures reminds the suction of a pump placed in this area. As a result, one can control the neutron spatial distribution and balance by means of the neutron moderation process.

One should also notice that inelastic processes slow-down 14 MeV neutrons most efficiently i.e. even better than the proton scattering characterized by a relatively low cross-section at this energy. Thus, the choice of the neutron multiplication, that always is an inelastic process, as the first probable interaction for source neutrons is not in contradiction with the requirement of intense moderation. Therefore, the need for undisturbed neutron multiplication (also as the desired slowing-down process in the higher energy region) and further neutron moderation through elastic scatterings is justified. As a result, their spatial separation seems to be the best solution. The source neutrons should face first the multiplying layer, if possible, free of all other nuclides (except of a small amount of ^{6}Li in order to suppress parasitic losses, see below). Then, the breeding/moderating region should follow the multiplying one.

The optimum thickness of the last one is a function of competing factors. It should be thick enough to utilize most the neutron multiplication/inelastic slowing-down processes but simultaneously thin enough in order not to hinder further desired neutron moderation in a hydrogeneous medium. Or in other words, it should not unnecessarily prolong the neutron life in the system, that must result in increased void streaming. The exact evaluation of the (n,2n) reaction spatial distribution would require the knowledge of the double-differential cross-sections for the reaction in question, that is not available up to now. However, there are no premisses to expect that the optimum multiplier thickness is peaked. To the contrary, a flat maximum of the tritium breeding is to be expected, thus leading to the conclusion that the optimum thickness would not bring significant improvement of the breeding ratio.

Finally, one should not forget the neutron parasitic absorptions in coolants and structural materials, the presence of these sets the lower limit to ^{6}Li concentration at the level where parasitic captures start to compete significantly with tritium breeding in ^{6}Li. This effect becomes more important as compared with the leakage losses with increasing volume of the breeding zone and thus usually softer spectrum reducing neutron escape.

Sometimes, it makes the lithium enrichment (in ^6Li) indispensable that once again favorizes non-absorbing coolants vs. e.g. water.

In view of all the above considerations the guidelines for the breeding blanket design can be summarized as follows:

- For the most effective trapping of neutrons within the breeding zone it should contain a hydrogeneous substance.

- The multiplying layer (of proper thickness) preceding the moderating region should not contain nuclides attenuating the neutron multiplication (i.e. structure materials, non-gaseous coolants)

- All regions of significant slow flux should contain ^6Li in order to reduce parasite neutron captures in there.

According to the above indications two breeding blanket designs have been proposed.

2.2 Breeding requirements

Three-dimensional neutron calculations have shown that the tritium breeding ration (TBR) of the BOT/SM (Breeder Outside Tube/Solid Moderator) reference blanket design of INTOR is equal to 0.66 (/5/, see also /1/ page 473), while the TBR referred to the sector covered by the blanket only (one-dimensional calculation) is equal to 1.08. The ratio of these TBR values gives the effective blanket coverage factor of 61%. If we assume 5% tritium losses during the extraction, reprocessing and refabricating period and a coverage factor of 61%, the resulting TBR for 100% coverage of a selfsustaining reactor would be:

$$TBR = \frac{1.05}{0.61} = 1.72 \qquad (1)$$

This value is of course too high and impossible to obtain (unless fissile neutron multiplication is applied that is not considered here) even with helium cooling. However, if we assume that a blanket can be placed on the inboard section of the torus, which covers 25.5% of the inner surface of the torus (/1/ page 472), and conservatively that the introduction of the inner breeding zone is only half as effective as the blanket in the outboard section, then the requirement for a selfsustaining reactor is:

$$TBR = \frac{1.05}{0.61 + \frac{0.255}{2}} = 1.42 \qquad (2)$$

The two blanket reference designs of the INTOR study have one dimensional or local breeding ratios of 1.08 for the BOT/SM and 1.16 for the BIT/LM (Breeder Inside Tube/Liquid Moderator) solution respectively, although the ^6Li enrichment of 30% was assumed /1/. Even in case of the alternative design with liquid breeder ($Li_{17}Pb_{83}$ with 30% enrichment in ^6Li) the one dimensional TBR is only 1.30 (page 798 /1/).

By the use of helium cooling and thus increasing the tritium breeding we try to satisfy the boundary condition posed by Eq. (2).

2.3 Calculations and Results

The objectives of the performed neutronic calculations were the evaluation of tritium breeding ratios and of the nuclear heating distribution indispensable for the design of cooling and tritium extraction systems.

In all neutronic calculations, the one dimensional finite element neutron and gamma transport code ONETRA /6/ in cylindrical geometry was applied together with the University of Wisconsin 25-neutron, 21-gamma group cross-section set /7/ condensed from the ENDF/B-IV based, Vitamin C libraray in P3, S8 approximations.

The blanket structures with the solid and with the liquid breeding media are presented in Fig.1 and 2 respectively (for the blanket description see Sections 4.1 and 4.2). The corresponding nuclear heating distributions are shown in Fig.3 and 4, while the TBRs are given in Table I.

Table I: Neutron balance and tritium breeding performance

Blanket type	Enrichment	Neutron multi-plication	Neutron losses			Tritium breeding		
			Parasitic Absorptions		Leakage into shield	T_6	T_7	Total
			FW	Breed. Mult.				
Liquid breeder	nat.	1.63	.08	.19	.04	1.32	.02	1.34
	30 % ^6Li	1.63	.07	.09	.02	1.45	.01	1.46
Solid breeder	nat.	1.60	.06	.17	.06	1.31	.03	1.34
	30 % ^6Li	1.60	.05	.09	.04	1.42	.02	1.44

The use of an one-dimensional code in cylindrical geometry signifies that the results refer to a 100% coverage. However, since the breeding zone is well moderated one should expect that the relative neutron losses in the breeder-uncovered areas should not exceed their solid angle as seen from the neutron source.

The obtained values of tritium breeding ratio (Table 1) are very promising and fully justify an optimistic evaluation of the proposed designs of fusion reactor blankets.

3. Heat Transfer Calculations for the Helium Cooled Divertor

The highest heat fluxes at the torus walls of INTOR occur at the divertor plates. In the case of the mechanically attached concept the peak heat flux in the cooling channels is $q=1.7\ MW/m^2 = 170\ W/cm^2$ (see Table VIII-15, page 418 of Ref. /1/). In the INTOR design the coolant channels have a rectangular cross section and are cooled by water. Here we assume that the coolant channels have a circular cross section and that they are cooled by helium. We choose coolant channels of 2 cm inner diameter, with the same coolant channel pitch to channel width ratio as in the INTOR design.

Assuming that the maximum heat flux is over the whole length of the coolant channel, the heat power per coolant channel is given by:

$$Q = q \times d \times L = 170 \times 2 \times 130 = 44200\ W \qquad (3)$$

where d = diameter of the coolant channel = 2cm
L = length of the coolant channel = 130 cm (/1/ page 418)

The chosen helium conditions are the following:

p_1 = inlet helium pressure = 52 bar
T_1 = inlet helium temperature = $40^{o}C$
M = helium mass flow per coolant channel = 600 g/s

The relevant helium physical properties are given by (see for instance Ref. /8/):

$$
\begin{aligned}
c_p &= \text{specific heat at constant pressure} = 5.199\ W/g^{o}C \\
\mu(g/cm\ s) &= \text{viscosity} = 0.4646\times10^{-5}\ (T(K))^{0.66} \\
k(W/cm^{o}C) &= \text{thermal conductivity} = 3.623\times10^{-5}\ (T(K))^{0.66} \\
\rho(g/cm^3) &= \text{density} = 0.048091\ \frac{p(bar)}{T(K)} \\
v_s(cm/s) &= \text{sound velocity} = 5.8875\times10^{3}\sqrt{T(K)} \\
Pr &= \text{Prandtl number} = 0.67
\end{aligned}
\tag{4}
$$

The resulting helium outlet temperature is thus:

$$T_2 = T_1 + \frac{Q}{M\ c_p} = 40 + \frac{44200}{600\times5.199} = 54.2^{o}C = 327.2\ K \tag{5}$$

and the mass velocity in the channel:

$$\rho_m v_m = \rho_2 v_2 = \frac{M}{\frac{\pi}{4}\ d^2} = \frac{600}{\frac{\pi}{4}\ 2^2} = 190.99\ g/cm^2\ s. \tag{6}$$

Thus, assuming a pressure drop in the channel of about 1.5 bar:

$$
\begin{aligned}
\rho_2 &= .048091\ \frac{50.5}{327.2} = 7.422\times10^{-3}\ g/cm^3 \\
v_2 &= \frac{190.99}{7.422\times10^{-3}} = 2.573\ \times\ 10^{4}\ cm/s \\
Ma_2 &= \frac{v_2}{v_{s2}} = \frac{2.573\times10^{4}}{5.8875\times10^{3}\sqrt{327.2}} = 0.242
\end{aligned}
\tag{7}
$$

The maximum helium velocity v_2=257.3 m/s might appear rather high, however the maximum Mach number at the channel outlet Ma_2 = 0.242 is relatively low so that no choking effects or vibrations are espected. Even if the helium velocity is high, the stresses on the structural materials are still acceptable, due to the very low helium density, as we shall see later when we calculate the channel pressure drop. Helium velocities of the order of 100 m/s and more are used in helium cooled fission reactors.

The pressure drop in the coolant channel is calculated as follows:

$$\rho_m = .048091 \frac{p_m}{T_m} = .048091 \frac{51.25}{320.1} = 7.700\times10^{-3} \text{ g/cm}^3$$

$$v_m = \frac{190.99}{7.7\times10^{-3}} = 2.48\times10^4 \text{ cm/s} \qquad (8)$$

$$\mu_m = 0.4646\times10^{-5}\ 320.1^{0.66} = 2.092\times10^{-4} \text{ g/cm s}$$

The average Reynolds number in the channel is given by:

$$Re_m = \frac{\rho_m v_m d}{\mu_m} = \frac{190.99\times2}{2.092\times10^{-4}} = 1.825\times10^6 \qquad (9)$$

The channel friction factor is calculated by iteration with the Prandtl- Nikuradse equation /9/:

$$\lambda = \frac{1}{\left[2\ \lg_{10}(Re_m\sqrt{\lambda})-0.8\right]^2} = \frac{1}{\left[2\ \lg_{10}(1.825\times10^6\sqrt{.01053})-0.8\right]^2} =$$

$$= 0.01053 \qquad (10)$$

and the pressure drop is:

$$\Delta p = \frac{L}{d}\,\lambda\,\frac{\rho_m\,v_m^{\,2}}{2} = \frac{130}{2}\,0.01053\,\frac{7.7\times10^{-3}\times2.48^2\times10^8}{2} = 1.62\times10^6\ \text{dyne/cm}^2 = \tag{11}$$

$$= 1.62\ \text{bar}$$

By an absolute helium pressure of about 50 bars, this pressure drop appears to be acceptable. Due to the fact that the velocity head is very high ($\rho_m v_m^2/2$ = 2.37 bar) the inlet and the outlet of the coolant channel should be carefully designed (nozzle-design) to reduce as much as possible the inlet and outlet pressure drops. But even if the velocity head is completely lost, the resulting total pressure drop of about 4 bar appears to be still acceptable. We assume that a total pressure drop for the helium cooling circuit of up to 5 bar (10% of the helium absolute pressure) is acceptable. This leaves 1 bar for the rest of the helium circuit. This is sufficient because in the rest of the helium circuit we do not have geometrical limitations like in the divertor plate region and we can use large helium ducts and considerably lower helium velocities.

We calculate now the channel surface maximum temperature. Assuming that the heat flux on the surface of the cooling plate is evenly distributed on the half portion of the coolant channel facing the inner side of the torus, the heat flux at the coolant channel wall is given by:

$$q_c = q\,\frac{d}{\frac{\pi}{2}\,d} = \frac{2\times170}{\pi} = 113.3\ \text{W/cm}^2 \tag{12}$$

The maximum temperature of the channel surface will occur at the channel outlet. The relevant helium properties there (T_2=372.2 K) are:

$$k_2 = 3.623\times10^{-5}\times327.2^{0.66} = 1.655\times10^{-3}\ \text{W/cm K}$$

$$\mu_2 = 0.4646\times10^{-5}\times327.2^{0.66} = 2.123\times10^{-4}\ \text{g/cm s} \tag{13}$$

thus: $$Re_2 = \frac{\rho_2 v_2 d}{\mu_2} = \frac{190.99 \times 2}{2.123 \times 10^{-4}} = 1.799 \times 10^6 \qquad (14)$$

$$h_2 = 0.022 \frac{k_2}{d} Re_2^{0.8} Pr^{0.4} \left(\frac{T_{w2}}{T_1}\right)^{-0.18} = .022 \frac{1.655 \times 10^{-3}}{2} (1.799 \times 10^8)^{0.8} \times$$

$$\times 0.67^{0.4} \left(\frac{403}{313}\right)^{-0.18} = 1.493 \text{ W/cm}^2\text{K} \quad /10/ \qquad (15)$$

and

$$T_{w2} = T_2 + \frac{q_c}{h_2} = 54.2 + \frac{113.3}{1.493} = 130.1^{\circ}\text{C} = 403.1 \text{ K} \qquad (16)$$

A maximum wall temperature of 130°C is acceptable. It is even lower than that calculated in the INTOR study with water cooling (137°C, see Table VIII-15 page 418, Ref. /1/).

4. Ceramic Blanket Design - Heat Transfer Calculations

4.1 Blanket Description

Fig.5 and 6 show the first wall and multiplier, as well as the breeder and breeder/moderator sections of the blanket. This blanket design corresponds to the material data distribution of Fig.1.

The first wall is 1.17 cm thick and it is made of austenitic stainless steel AISI 316 cold work, as suggested in the INTOR study /1/. The thickness of 1.17 cm corresponds to the initial value (without erosion) in the outboard section of the torus, where most of the blanket is placed /1/. The first wall is cooled by stainless steel tubes containing the coolant helium at a pressure of about 50 bars and temperatures less than 100°C. The cooling tubes run in toroidal direction. The blanket is formed by poloidal segments, whose average width is about 2 meters as in the European INTOR

design/11/, thus all the cooling tubes are assumed to be 2 meters long. The tubes have an inner diameter of 0.6 cm and a thickness of 0.03 cm. They are immediately welded to the first wall. The tube pitch in poloidal direction is 0.76 cm leaving a minimum distance between the tubes of 0.1 cm. To ensure a good thermal contact between first wall and cooling pipes, these are surrounded by lead. Then there is a layer of lead 9.335 cm thick (neutron multiplier by means of (n,2n) reactions),followed by another row of stainless steel cooling pipes of 0.3 cm inner diameter and 0.015 cm thickness containing helium coolant at about 50 bar pressure and temperature less than 100°C. These pipes are welded together and form the outer containment for the lead layer. Outside this layer of tubes there is an insulating layer of mineral wool 1 cm thick. The function of this layer is to insulate the multiplier side of the blanket, where the lead has to be kept at a temperature lower than its melting point (327°C), from the breeder and breeder moderator side of the blanket where temperatures have to be higher than 400°C. Such temperature is needed in order to increase the tritium diffusivity in the breeding material and thus decrease the tritium inventory in the breeder itself.

Fig.6 shows the breeder and breeder/moderator part of the blanket. On the left side of the picture, next to the insulating layer of mineral wool, there is the breeder portion of the blanket. On the right side of this there is a mixture of breeder and moderator material. For the present design we have chosen, as in the INTOR study, lithium metasilicate (Li_2SiO_3) as representative for a ceramic breeder material. This is because this material seems to be the most stable of the various considered ceramic lithium salts (Li_4SiO_4, Li_2O, $LiAlO_2$). However, all these salts are not yet well known, especially as far as their behaviour under irradiation is concerned and their capability to release tritium. During operating conditions it is recommended that the Li_2SiO_3 breeder is kept at temperatures greater than 400°C to have a sufficiently high tritium diffusion coefficient, and lower than 600°C to avoid sintering and therefore, again, an increase in the amount of tritium retained in the breeder

/1/. Tritium inventory aspects will be discussed later in the paper (Section 6). The Li_2SiO_3 is in form of spheres or particles of 2 mm diameter. The spheres are contained in perforated stainless steel tubes with an outer diameter of 2 cm and a thickness of 0.03 cm. The perforated tubes are placed in a triangular array with a pitch of 2.1 cm and kept in position by six spiral ribs integral with the tubes. This type of arrangement with integral spiral spacers has been proposed for fission reactor fuel elements, and similar tubes (albeit without perforations) of stainless steel have been manufactured /12/.This type of breeder element allows a small amount of helium to percolate through the breeder particles. Due to the heat produced in the breeder, the helium expands and is forced outside the perforated tube into the coolant channels placed between the tubes, while cool helium from the channels penetrates the perforated tubes /13/. This has the advantage of improving the heat transfer within the bed and between the bed and the helium in the coolant channels /14/ and, even more important, of improving the continuous extraction of tritium from the breeding material. The small breeder particles occupy about 74% of the space inside the perforated tubes (The packing factor of 74% is the maximum possible with a bed of equal diameter spheres: see for instance Ref. /13/). The calculations have been performed with this packing factor of 74%. Sometimes in the literature practical values for the packing factor of 62% have been quoted. If the assumed packing factor of 74% were difficult to achieve in practice, then it would be necessary to use particles of two different diameters (for instance 2 mm and 0.8 mm) which allow higher packing factors. Another possibility of compensating for the low breeder density is to increase the ^6Li enrichment.

In the region breeder/moderator of the blanket, there is the same arrangement of tubes (triangular array with p=2.1 cm, d=2 cm and six spiral integral spacer ribs), however 2 of every 3 tubes contain the moderator. The tubes containing the moderator are not perforated, have an inner diameter of 1.9 cm (thickness of tubes 0.05 cm) and contain zirconium hydride ($ZrH_{1.7}$). This is solid up to high temperatures (>750°C) and has been used as solid moderator in fission reactors (for instance in the KNK reactor) for its high content of hydrogen. The breeder and moderator elements

are contained in stainless steel pressure tubes (see Fig.6). These tubes run in toroidal direction and are about 2 meters long. To increase the filling of the blanket region as much as possible two types of tubes have been selected: one with an outer diameter of 18 cm (thickness 0.2 cm) and the other with an outer diameter of 7.45 cm (thickness 0.08 cm). The bigger pressure tubes contain 63 breeder or moderator elements each, the smaller pressure tubes 10 only. Altogether the thickness of the blanket, inclusive of the first wall, is 48.5 cm, which is within the limitation given in the INTOR study (50 cm /1/).

4.2 Heat Transfer Calculations. First Wall-Multiplier

Fig.3 shows the nuclear heating distribution in w/cm^3 in the ceramic blanket described in the previous section for a neutron wall load of 1 MW/m^2. Section 2.3 gives a short description of how the neutron calculations to obtain this power density distribution have been performed.

The heat transfer calculations are performed for a blanket for INTOR, i.e. for a neutron wall load of 1.3 MW/m^2. The data of Fig.3 have thus to be multiplied by 1.3.

The heat transfer calculations have to be performed by iteration until the position of the surface of maximum lead temperature is determined. The position of this surface determines the splitting of the heat going to the cooling coils of 0.6 cm diameter at the left of the multiplier from the heat going to the coils of 0.3 cm diameter on the right side. The one-dimensional heat conduction calculations in the lead have been performed assuming a linear power distribution in each of the sides of the lead multiplier:

$$q_v = a + bx \qquad (17)$$

where x is the distance from the surface of maximum temperature. Thus the temperature distribution in the lead is:

$$T_{Pb} = T_{Pb\ max} - \frac{1}{k_{Pb}} \left[\frac{ax^2}{2} + \frac{bx^3}{6} \right] \qquad (18)$$

where k_{Pb} is the thermal conductivity of lead:

$$k_{Pb}\ (W/cm^{o}C) = 0.354 - 1.2x10^{-4}\ T(^{o}C) \qquad (19) \qquad /14/$$

The constants a and b are of course different for each side and can be obtained from Fig.3 once the position of the surface of maximum temperature is chosen. The temperatures at the borders of the lead layer are determined by the heat transfer by conduction through the steel cooling tubes and by the heat transfer by convection between tubes and cooling helium, therefore they depend upon the power splitting in the lead. That is the reason why the calculations have to be performed by iteration. Fig.5 shows the result of this iteration procedure: the surface of maximum temperature is at 4.56 cm from the outer surface of the first wall. The assumed thermal conductivity in the stainless steel tubes is 0.156 $W/cm^{o}C$ (thermal conductivity of steel at $100^{o}C$: see Ref. /1/ page 350). For the calculation of the temperatures of the tubes near the first wall, we took account also of the heat flux on the inner surface of the first wall and of the average nuclear heating in the first wall itself. These were the values calculated for the outboard section of the INTOR: i.e. 13.6 W/cm^2 and 13 W/cm^3 respectively (see Ref./1/ page 333). The helium physical properties and the calculation procedure were those of section 3 and we do not need to repeat them here. The main results of the calculations are given in Table II. All the results appear to be acceptable. In particular, helium velocities and velocity heads are lower than for the divertor cooling tubes (see Section 3). The resulting maximum temperatures of the outer side of the first wall and the maximum temperature of the lead are $121.4^{o}C$ and $249^{o}C$ respectively. Both these values appear to be acceptable. Indeed for the outboard region of INTOR the outer or back-face temperature of the first wall is about $120^{o}C$ (see Fig. VII-4, page 341 of Ref. /1/), while a temperature of $249^{o}C$ appears to be sufficiently lower than the melting point of lead

(327°C). The lead of course has no structural function. This function is rather taken up by the cooling tubes themselves.

4.3 Heat Transfer Calculations. Breeder-Breeder/Moderator

The power densities given in Fig.3 are referred to the total volume of the breeder and of the breeder/moderator section. The power densities of Fig.3 have thus to be multiplied, besides the factor 1.3 (see Section 4.2), also by the factor:

$$\phi_1 = \frac{18^2}{\frac{\pi}{4}\,17.6^2 + \frac{1}{2}\,\frac{\pi}{4}\,7.29^2} \times \frac{19}{18} = 1.2947 \qquad (20)$$

for the breeder section. This is to take account of the fact that no power is produced in the space between the pressure tubes (see Fig.6) and that for the nuclear calculations the mineral wool layer of 1 cm thickness (where no power is produced) was considered as part of the 18 cm thick breeder section. And for the breeder/moderator section by the factor:

$$\phi_2 = \frac{18^2}{\frac{\pi}{4}\,17.6^2 + \frac{1}{2}\,\frac{\pi}{4}\,7.29^2} = 1.2266 \qquad (21)$$

to take account of the space between the pressure tubes.

4.3.1 Breeder Section

We perform the calculations for the case of 30% Li^6 enrichment, because for this case the power density is higher in the breeder (see Fig.3) and for the region near the multiplier where power density is the highest. The thickness of the breeder region considered is 4.1 cm, which corresponds to the thickness of two breeder rods and the space in between. The considered power

density is thus (see Fig.3):

$$q_v = 1.3 \times 1.2947 \times 2.93 = 4.93 \text{ W/cm}^3 \quad (22)$$

The area of the unit cell surrounding a coolant channel (see Fig.6) is given by:

$$A_{cell} = 1.910 \text{ cm}^2 \quad (23)$$

while the cross section area and the hydraulic diameter of the coolant channel are respectively:

$$A = 0.3328 \text{ cm}^2 \quad (24)$$

$$d_h = 0.2022 \text{ cm} \quad (25)$$

The inlet and outlet helium coolant temperatures in the breeder and breeder/moderator sections are chosen with the following criteria:

- the helium inlet temperature T_1 must be such as to ensure that the breeder is at temperatures higher than 400°C to have sufficiently high tritium diffusivity in the breeder itself (Ref./1/, page 440-441). Thus we choose T_1=400°C.
- the helium outlet temperature T_2 is practically the same as the maximum temperature of the pressure tubes. To reduce the possible tritium penetration through these steel pressure tubes this temperature should not be greater than 450°C (see Ref./1/ page 480). We choose therefore T_2=450°C.

With these assumptions we may then calculate the amount of heat given to each cell and the required helium mass flow per cell:

$$Q_{cell} = L\, q_v\, A_{cell} = 200 \times 4.93 \times 1.910 = 1883 \text{ W} \quad (26)$$

$$M = \frac{Q_{cell}}{c_p(T_2 - T_1)} = \frac{1883}{5.199(450-400)} = 7.245 \text{ g/s} \quad (27)$$

The helium mass velocity in the cell is:

$$\rho_m v_m = \rho_2 v_2 = \frac{M}{A} = \frac{7.245}{0.3328} = 21.77 \text{ g/cm}^2\text{s} \tag{28}$$

the average helium viscosity:

$$\mu_m = 0.4646\text{x}10^{-5} \left(\frac{400+450}{2} + 273\right)^{0.66} = 3.500\text{x}10^{-4} \text{ g/cm s} \tag{29}$$

and the average Reynolds number:

$$Re_m = \frac{\rho_m v_m d_h}{\mu_m} = \frac{21.77\text{x}0.2022}{3.5\text{x}10^{-4}} = 1.258\text{x}10^4 \tag{30}$$

Following Ref. /17/ a new Reynolds number is defined:

$$Re'_m = Re_m \sqrt{F} \tag{31}$$

with

$$F = \left(\frac{p}{d}\right)^{0.5} + \left[7.6 \frac{(p/d)^3}{(H/d)}\right]^{2.16} \tag{32}$$

where p is the pitch of the breeder rods (p=2.1 cm) and H is the axial pitch of the integral spiral spacer ribs. We assume here H=60 cm. We have therefore:

$$F = \left(\frac{2.1}{2}\right)^{0.5} + \left[7.16 \frac{(2.1/2)^3}{(60/2)}\right]^{2.16} = 1.0954 \tag{33}$$

and

$$Re' = \sqrt{1.0954}\text{x}1.258\text{x}10^4 = 1.317\text{x}10^4 \tag{34}$$

For $Re' < 1.9\text{x}10^4$, Ref. /17/ suggests that the channel friction factor is:

$$\lambda = F \times C_R \left[\frac{0.1317}{Re_m'^{0.17}} + \frac{60}{Re_m'} - 3.2\times10^{-3} \right] = 1.0954\times2.2 \left[\frac{0.1317}{(1.317\times10^4)^{0.17}} + \right.$$

$$\left. + \frac{60}{1.317\times10^4} - 3.2\times10^{-3} \right] = 0.06655 \qquad (35)$$

where C_R=2.2 is a correction factor which takes account of the increase in friction due to the momentum exchange which occurs at the wall of the perforated tubes /13/.

Assuming a helium inlet pressure of 52 bar and guessing a pressure drop value of Δp=4.6 bar, one calculates the average helium density:

$$\rho_m = 0.048091 \frac{49.7}{\frac{400+450}{2} + 273} = 3.4242\times10^{-3} \text{ g/cm}^3 \qquad (36)$$

and average velocity:

$$v_m = \frac{21.77}{3.4242\times10^{-3}} = 6358 \text{ cm/s} \qquad (37),$$

and the pressure drop is:

$$\Delta p = \frac{L}{d_h} \lambda \frac{\rho_m v_m^2}{2} = \frac{200}{0.2022} 0.06655 \frac{3.4242\times10^{-3}\times6358^2}{2} = 4.56\times10^6 \text{ dyne/cm}^2$$

$$= 4.56 \text{ bar} \qquad (38)$$

We calculate now the perforated tube maximum wall temperature at the channel outlet (T_2=450°C=723 K).The helium physical properties there are:

$$k_2 = 3.623\times10^{-5}\times723^{0.66} = 2.793\times10^{-3}\ W/cm^{o}C \qquad (39)$$

$$\mu_2 = 0.4646\times10^{-5}\times723^{0.66} = 3.582\times10^{-4}\ g/cm\ s$$

and the Reynolds number:

$$Re_2 = \frac{\rho_2 v_2 d_h}{\mu_2} = \frac{21.77\times0.2022}{3.582\times10^{-4}} = 1.229\times10^{4} \qquad (40)$$

Thus the heat transfer coefficient between perforated rod surface and coolant is:

$$h_2 = 0.0211\ Pr^{0.4}\ C_{SR}\frac{\left[1+0.0208\left(\frac{p}{d}-1\right)\right]\left(1-e^{-\frac{p/d-1}{0.02}}\right)}{d_h}k_2\ Re_2^{0.8} =$$

$$= 0.0211\times0.67^{0.4}\times2.36\ \frac{\left[1+0.0208\left(\frac{2.1}{2}-1\right)\right]\left(1-e^{-\frac{2.1/2-1}{0.02}}\right)}{0.2022}\ 2.793\times10^{-3}\times$$

$$(1.229\times10^{4})^{0.8} = 1.005\ W/cm^{2}\ {}^{o}C \qquad /18/ \qquad (41)$$

where C_{SR}=2,36 is a correction factor which takes account of the increase in heat transfer coefficient due to the perforations in the tube surface /13/.

The heat flux at the rod surface is:

$$q_2 = \frac{Q_{cell}}{L\times\frac{\pi d}{2}} = \frac{2\times1883}{200\times\pi\times2} = 2.998\ \ W/cm^{2} \qquad (42)$$

and the resulting maximum temperature at the rod surface:

$$T_{W2} = T_2 + \frac{q_2}{h_2} = 450 + \frac{2.998}{1.005} = 453^{o}C \qquad (43)$$

As one can see the temperature difference between wall and coolant is very small and the improvement in heat transfer coefficient due to the perforations is not very important.

We proceed now to calculate the maximum temperature in the breeder particle bed. This calculation is performed by iteration. By the last iteration we know the average temperature of the bed and thus the helium properties, as well as the average helium velocity in the particle bed. For an average temperature in the bed of 440.5°C = 713.5 K one has:

$$\mu = 0.4646\times10^{-5}\times713.5^{0.66} = 3.351\times10^{-4}\ \text{g/cm s}$$

$$\rho = 0.048091\ \frac{49.7}{713.5} = 3.350\times10^{-3}\ \text{g/cm}^3 \qquad (44)$$

and

$$Re_b = \frac{\rho v_b d_p}{\mu} = \frac{3.35\times10^{-3}\times115.3\times0.2}{3.351\times10^{-4}} = 217.5 \qquad (45)$$

Where v_b = 115.3 cm/s is the average helium velocity in the bed, calculated in the last iteration step (see Eq.(46) below), d_p=0.2 cm is the diameter of the particles and Re_b is the bed Reynolds number. The pressure drop across the length (L=200 mm) of the bed is imposed by the pressure drop in the coolant channel, i.e. Δp = 4.56 bar (see Eg. (38)). Thus, by means of the equation of Fehling /19/ which gives the pressure drop in the bed as a function of the velocity for low Reynolds numbers (Re_b<500) one obtains the helium velocity in the bed:

$$v_b = \varepsilon^2\sqrt{\frac{2d_p\Delta p}{\phi\rho L(1+8\ \frac{D}{d})}} = 0.74^2\sqrt{\frac{2\times0.2\times4.56\times10^6}{0.78\times3.35\times10^{-3}\times200(1+8\ \frac{1.94}{0.2})}} =$$

$$= 115.3\ \text{cm/s} \qquad (46)$$

Where D is diameter of the particle bed, ε=0.74 is the packing factor of the bed, and ϕ is the drag coefficient of the single particle. For Re_b=217.5, ϕ=0.78 (see Ref. /9/ page 16).

For $Re_b x Pr = 217.5 x 0.67 = 145$ and $\frac{D}{d} \approx 10$, Fig.11 of Ref. /13/ gives the ratio of the effective bed thermal conductivity to the helium conductivity:

$$\frac{k'_c}{k_2} = 23 \tag{47}$$

The average bed temperature at the outlet section of the breeder is 465°C therefore:

$$k_2 = 3.623 x 10^{-5} x 738^{0.66} = 2.831 x 10^{-3} \text{ W/cm s} \tag{48}$$

and

$$k'_c = 23 x 2.831 x 10^{-3} = 0.0611 \text{ W/cm s} \tag{49}$$

The breeder rod linear rating is given by:

$$q_1 = \frac{2Q_{cell}}{L} = \frac{2 x 1883}{200} = 18.83 \text{ W/cm} \tag{50}$$

and the maximum temperature in the breeder is:

$$T_{b\ max} = T_{w2} + \frac{q_1}{4\pi k'_c} = 453 + \frac{18.83}{4\pi x 0.06511} = 476^{\circ}C \tag{51}$$

4.3.2 Breeder/Moderator Section

We perform the heat transfer calculations for the moderator only, because the power density in the breeder is here slightly lower than in the breeder section. The calculations are performed for the case of natural litium because the power density is higher. Again we consider the 4.1 cm thick slab next to the breeder section. The considered power density is thus (see Fig.3 and Eq.(21)):

$$q_v = 1.3 \times 1.2266 \times 2.625 = 4.19 \text{ W/cm}^3 \tag{52}$$

Analogously to Eq. (26):

$$Q_{cell} = L\, q_v\, A_{cell} = 200 \times 4.19 \times 1.910 = 1599 \text{ W} \tag{53}$$

The helium mass flow per coolant channel is given by:

$$M = 7.245 \sqrt{2.2} = 10.75 \text{ g/s} \tag{54}$$

because the helium pressure drop in the breeder/moderator section is the same as in the breeder section. The mass flow in the breeder channels is 7.245 g/s. In the moderator channels the mass flow is $\sqrt{2.2}$ higher because the surface of the moderator rods is smooth and not perforated like in the breeder rod, thus the correction factor C_R is for the moderator rod equal to 1 and not 2.2 (cf. Eq.(35)).

The helium mass velocity is thus:

$$\rho_m v_m = \rho_2 v_2 = \frac{M}{\bar{A}} = \frac{10.75}{0.3328} = 32.29 \text{ g/s} \tag{55}$$

and the helium outlet temperature

$$T_2 = T_1 + \frac{Q_{cell}}{c_p\, M} = 400 + \frac{1599}{5.199 \times 10.75} = 429^{\circ}\text{C} = 702 \text{ K} \tag{56}$$

The helium properties at the channel outlet are therefore:

$$\begin{aligned} k_2 &= 3.623 \times 10^{-5} \times 702^{0.66} = 2.738 \times 10^{-3} \text{ W/cm}^{\circ}\text{C} \\ \mu_2 &= 0.4646 \times 10^{-5} \times 702^{0.66} = 3.512 \times 10^{-4} \text{ g/cm s} \end{aligned} \tag{57}$$

and the Reynolds number:

$$Re_2 = \frac{\rho_2 v_2 d_h}{\mu_2} = \frac{32.29 \times 0.2022}{3.512 \times 10^{-4}} = 1.859 \times 10^4 \qquad (58)$$

The heat transfer coefficient between rod surface and coolant helium at the channel outlet is given by:

$$h_2 = 0.0211\ Pr^{0.4}\ \frac{\left[1+0.0208\left(\frac{p}{d}-1\right)\right]\ \left(1-e^{-\frac{p/d-1}{0.02}}\right)}{d_h}\ k_2\ Re_2^{0.8} =$$

$$= 0.0211 \times 0.67^{0.4}\ \frac{\left[1+0.0208\left(\frac{2.1}{2}-1\right)\right]\left(1-e^{-\frac{2.1/2-1}{0.02}}\right)}{0.2022}\ 2.738 \times 10^{-3}$$

$$(1.859 \times 10^4)^{0.8} = 0.581\ W/cm^{o}C \qquad /19/ \qquad (59)$$

The heat flux at the rod surface is:

$$q_2 = \frac{Q_{cell}}{L \times \frac{\pi d}{2}} = \frac{2 \times 1599}{200 \times \pi \times 2} = 2.544\ W/cm^2 \qquad (60)$$

and the resulting maximum temperature at the rod surface:

$$T_{w2} = T_2 + \frac{q_2}{h_2} = 429 + \frac{2.544}{0.581} = 433^{o}C \qquad (61)$$

The temperature difference in the stainless steel cladding is given by:

$$\Delta T_{SS} = \frac{q_2 s}{k_{SS}} = \frac{2.544 \times 0.05}{0.156} = 0.8^{o}C \qquad (62)$$

The moderator rod linear rating is:

$$q_1 = \frac{2Q_{cell}}{L} = \frac{2 \times 1599}{200} = 15.99\ W/cm \qquad (63)$$

The thermal conductivity of zirconium hydride at $440^{o}C$ is:

$$k_{Zr\ H_{1,5}} = 0.2127\ W/cm^{o}C \qquad /20/ \qquad (64)$$

Thus the maximum temperature in the moderator is:

$$T_{2\ ,\ ZrH_{1,7}} = T_{W2} + \Delta T_{SS} + \frac{q_1}{4\pi k_{ZrH_{1.5}}} = 433 + 0.8 + \frac{15.99}{4\pi x 0.2127} =$$

$$= 440^{o}C \qquad (65)$$

We have assumed here that the thermal conductivity of $ZrH_{1.7}$ and $ZrH_{1.5}$ are the same, and we have neglected the temperature difference between outer surface of the moderator and inner surface of the cladding. If we assume a heat transfer coefficient between these two surfaces of 1 $W/cm^2 oC$ (typical value for fuel elements of fast reactors), the moderator maximum temperature would be only slightly higher ($442^{o}C$). The main results of the heat transfer calculations for the breeder and the breeder moderator of the ceramic blanket are shown in Table III.

We calculate now the stresses in the pressure tubes due to the coolant pressure. We perform this calculation at the coolant channels outlet, where the temperatures are the highest. The stresses are:*

$$\sigma_1 = \frac{(p_1 - \Delta p - p_o) D_1}{2\ s_1} = \frac{(52-4.6-1)18}{2x0.2} = 2088\ bar$$

$$\sigma_2 = \frac{(p_1 - \Delta p - p_o) D_2}{2\ s_2} = \frac{(52-4.6-1)7.45}{2x0.08} = 2160\ bar \qquad (66)$$

for the bigger and the smaller pressure tubes respectively. For stainless steel AISI 316 cold work at $450^{o}C$ the acceptable stress is about 2100 bar (see Fig.VII-14, page 367 of Ref. /1/), thus these stresses can be deemed as acceptable.

*If we assume vacuum in the region between the pressure tubes, to reduce the stresses on the first wall, then $p_o = 0$ and σ_1 and σ_2 become 2133 and 2207 bar respectively.

5. Liquid Breeder Blanket Design - Heat Transfer Calculations

5.1 Blanket Description

Various lithium alloys have been proposed as liquid breeders for a fusion reactor (pure liquid lithium, $L_{17}Pb_{83}$, $LiPb_4Bi_5$ and others). For the present design we choose as representative of a liquid breeder the alloy $Li_{17}Pb_{83}$, because it shows very little evidence of a chemical reaction with water (see page 796 Ref./1/) and also because its physical properties are relatively well known (page 797, Ref. /1/). However, the compatibility between $Li_{17}Pb_{83}$ and stainless steel at high temperatures might pose a problem, for this reason in Ref. /1/ page 799 a limitation of 670K = 397°C has been suggested for the contact temperature between steel and $Li_{17}Pb_{83}$. In the present study we will also assume this temperature as the upper limit for $Li_{17}Pb_{83}$. On the other end the melting point of $Li_{17}Pb_{83}$ is 225°C, thus the temperature of this breeder material must be higher than 225°C during operation to ensure that it is liquid, so that tritium can be extracted by continuous circulation of the breeder outside the blanket region.

Fig.7 and 8 show the first wall and its cooling system, as well as the breeder/multiplier and breeder/moderator sections of the blanket.

As in the previous design the first wall is made of stainless steel AISI 316 and it is 1.17 cm thick. Also here the first wall is cooled by stainless steel tubes containing helium at a pressure of about 50 bars and temperatures less than 100°C. The tubes are placed in the same way as in the case of the ceramic blanket design and have the same inner diameter, thickness and pitch. To ensure a good thermal contact with the first wall they are surrounded by lead. The tubes are thermally insulated from the breeder section of the blanket by a layer of mineral wool 1 cm thick. This to separate the low temperatures in the first wall region from the higher temperatures on the

breeder/multiplier side (higher than the melting point of the breeder/multiplier).

The breeder/multiplier and breeder/moderator regions of the blanket (Fig.5) are made up of $Li_{17}Pb_{83}$ (breeder/multiplier) and a mixture of $Li_{17}Pb_{83}$ and $ZrH_{1.7}$ (moderator) respectively. On the left side of Fig.5, next to the insulating layer of mineral wool, there is a stainless steel wall of 0.5 cm thickness, then a layer of 9.99 cm thickness of $Li_{17}Pb_{83}$. The breeder/multiplier is cooled by three rows of stainless steel tubes placed in a regular square array with a pitch of 3,33 cm. The first row of tubes on the left side is $\frac{3.33}{2}$ cm distant from the steel layer. The coolant tubes have an inner diameter of 1 cm and a thickness of 0.1 cm and contain helium at a pressure of about 25 bar and temperatures below 300°C.

The breeder/moderator section is separated by the breeder/multiplier section by a steel wall of 0.5 cm thickness. These two stainless steel layers have a structural function as well. The thickness of 0.5 cm has been chosen because this is the thickness of the steel wall for the liquid breeder design of the INTOR study (see Fig. XXI-30, page 797 of Ref. /1/). The thickness of the breeder/moderator region is 30 cm. The cooling of this region is obtained by 6 rows of stainless steel tubes placed in a regular square array with a pitch of 5 cm. The first row of tubes on the left side is 2.5 cm distant from the steel layer separating the breeder/multiplier and the breeder/moderator regions. The coolant tubes have an inner diameter of 1.4 cm and a thickness of 0.1 cm and contain helium at a pressure of about 25 bar and temperatures below 300°C.

The breeder material in liquid form ($Li_{17}Pb_{83}$) is separated from the moderator (solid $ZrH_{1.7}$) by a steel tube concentric with the cooling tube, with an inner diameter of 4.5 cm and a thickness of 0.1 cm (see Fig.5). The diameter of this tube is so chosen that the

volume ratio of the moderator to breeder in the breeder/moderator region is about 2 to 1 (This is suggested by neutronic considerations to increase the breeding as much as possible). Altogether the thickness of the blanket, inclusive of the first wall, is 43.8 cm, which is within the limitation given in the INTOR study (50 cm /1/).

5.2 Heat Transfer Calculations: First Wall

Fig. 4 shows the nuclear heating distribution in W/cm^3 in the liquid breeder blanket described in the previous section for a neutron wall load of 1 MW/m^2. This distribution has been obtained with the neutronic calculations (see Section 2.3). The heat transfer calculations are performed for a blanket for INTOR, i.e. for a neutron wall load of 1.3 MW/m^2. The data of Fig. 4 have thus to be multiplied by the factor 1.3.

For the calculation of the temperatures of the first wall cooling tubes, we take account also of the heat flux on the inner surface of the first wall. We assume here again the heat flux at the inner surface of the outboard section of INTOR: i.e. 13.6 W/cm^2 (Ref./1/ page 333). The power densities in the first wall, in the tube region and in the thermal insulation region are those given in Fig. 4 times 1.3. The heat produced in the thermal insulation is transported almost completely to the first wall coolant tubes because on the right side of the thermal insulation the temperatures are considerably higher than on the left side. As the helium physical properties and the calculation procedure are the same as those of Section 3., they are not repeated here. Table IV gives the main results of these heat transfer calculations. All the results appear to be acceptable. The resulting maximum temperature of the outer side (back-face) of the first wall is 120°C, about the same value obtained for the outboard region of the INTOR (see Fig. VII-4, page 341 of Ref. /1/).

5.3 Heat Transfer Calculations: Breeder/Multiplier

The power densities in Fig.4 are referred to the total volume of the breeder/multiplier section, they have thus to be multiplied, besides the factor 1.3 (see Section 5.2), also by the factor:

$$\phi_1 = \frac{0.5+9.99}{9.99} \quad \frac{3.33^2}{3.33^2 - \frac{\pi}{4}\, 1.2^2} = 1.169 \tag{67}$$

This takes account of the fact that for the heat transfer calculations we assume pessimistically that all the power is produced in the breeder/multiplier, while the results of Fig.4 are referred to the total volume of the breeder/multiplier, or also to that of the 0.5 cm thick steel layer and of the cooling tubes (1.2 cm outer diameter). We perform the calculations for the case of 30% Li^6 enrichment, because in this case the power density is slightly higher in the breeder/moderator (see Fig.4). We consider the square unit cell of 3.33 cm side nearest to the thermal insulation because here the power density is the highest. For this cell, considering the corrections mentioned above, the average power density in the $Li_{17}Pb_{83}$ is 6.4 W/cm^3.

In the calculation of the temperature of the $Li_{17}Pb_{83}$ only conduction is taken into account, because the convection velocity of $Li_{17}Pb_{83}$ is very small to avoid any disturbance of the plasma confining magnetic field. The maximum temperature of the breeder is at the edges of the square cell. Assuming a linear power distribution along the diagonal of the unit cell and neglecting the heat conduction perpendicular to the diagonal (this is a pessimistic assumption: a two-dimensional heat conduction calculation would surely produce lower temperatures at the edges of the square):

$$q_v = a + br \tag{68}$$

where r is the radial distance from the center of the cooling tube (cell center), one can obtain by integration of the heat conduction equation the temperature difference between the maximum breeder temperature ($T_{b\ max}$) and the temperature at the outer surface of the coolant tube (T_{b1}):

$$T_{b\ max} - T_{b1} = \frac{1}{k_b}\left[\frac{a}{2}r_2^2 + \frac{b}{3}r_2^3 - ar_2r_1 - \frac{b}{2}r_2^2r_1 + \frac{ar_1^2}{2} + \frac{br_1^3}{6}\right] \quad (69)$$

with $$a = \frac{q_1r_2 - r_1q_2}{r_2 - r_1}$$

$$b = \frac{q_2-q_1}{r_2-r_1}$$

q_1 = power density at the tube surface (left side, where the power density is higher) = 6.64 W/cm^3
q_2 = power density at the edge of the cell (left side) = 7.49 W/cm^3
r_1 = outer tube radius = 0.6 cm
r_2 = radius at the cell edge = $\frac{3.33\sqrt{2}}{2}$ = 2.35 cm
k_b = thermal conductivity of $Li_{17}Pb_{83}$=0.17 W/cm°C (Table XXI-12, page 797 of Ref. /1/)

With these numerical data one obtains:

$$T_{b\ max} - T_{b1} = 65.2^{o}C \quad (70)$$

The heat flux across the coolant tube thickness, again on the left side where it is greater, is:

$$q_{SS} = \frac{\frac{7.49 + 6.35}{2}\ \frac{(3.33^2 - \frac{\pi}{4}1.2^2)}{2}}{\frac{\pi\times 1.1}{2}} = 19.95\ W/cm^2 \quad (71)$$

and the temperature drop across the tube thickness:

$$\Delta T_{SS} = \frac{19.95 \times 0,1}{0.181} = 11.0^{o}C \qquad (72)$$

where 0.181 W/cm^{o}C is the thermal conductivity of stainless steel at 280°C (Table VII-8 page 350 of Ref. /1/).

The melting point of $Li_{17}Pb_{83}$ is 225°C, therefore we choose a helium inlet temperature in the cooling tubes of T_1= 225°C. We can now perform the calculation of the coolant tubes temperatures and of the pressure drop. The equations used are the same as those of Section 3. The results of these calculations are summarized in Table V. All the results appear to be acceptable. As expected, the helium temperatures are here higher than in the first wall cooling tubes, however the required helium pressure is only the half. The maximum temperature in the $Li_{17}Pb_{83}$ is less than the chosen limit of 397°C. The calculated temperature of 394°C is an overestimation of the real temperature because it was estimated with an one-dimensional conduction calculation (Eq.(68) and (69)).

5.4 Heat Transfer Calculations: Breeder/Moderator

The power densities in Fig.4 are referred to the total volume of the breeder/moderator section, they have thus to be multiplied, besides the factor 1.3 (see Section 5.2), also by the factor:

$$\phi_2 = \frac{0.5+30}{30} \; \frac{5^2}{5^2 - \frac{\pi}{4} 1.6^2 - \pi \; 4.55 \times 0.05} = 1.141 \qquad (73)$$

This to take account of the fact that we assume that all the power is produced either in the breeder/multiplier ($Li_{17}Pb_{83}$) or in the moderator ($ZrH_{1.7}$), while in the nuclear calculations all the volume is considered, also that of the 0.5 cm thick steel layer, of the cooling tubes and of the tubes separating the breeder/multiplier from the moderator. We perform the calculations

for the case with natural lithium because in this case the power density is slightly higher in the breeder/moderator region (see Fig.4). We consider the square unit cell of 5 cm side nearest to the steel layer separating the breeder/multiplier and breeder/moderator regions, because here the power density is the highest. For this cell, considering the corrections mentioned above, the average power density is in the breeder/multiplier and moderator regions 6.2 W/cm^3.

Also here as in Section 5.3 for the calculation of the temperature of the $Li_{17}Pb_{83}$ only conduction is taken into account. The maximum temperature in the breeder/multiplier is on the left side of the border breeder/multiplier and moderator, because here the power density and the distance from the cooling tube are the highest. Assuming a linear power distribution along the radius going from the center of the cooling tube to the left side of the cell:

$$q_v = a + br \tag{74}$$

one can obtain by integration of the heat conduction equation the temperature difference between the maximum breeder/multiplier temperature ($T_{b\ max}$) and the temperature at the left outer surface of the coolant tube (T_{b1}):

$$T_{b\ max} - T_{b1} = \frac{1}{k_b}\left[\left(\frac{ar_2^2}{2} + \frac{br_2^3}{6}\right) lg_e \frac{r_2}{r_1} - \frac{a}{4}\left(r_2^2 - r_1^2\right) - \frac{b}{18}\left(r_2^3 - r_1^3\right)\right] \tag{75}$$

where the definitions of a, b and k_b are the same as those of Section 5,3 (Eq.(69)) and the numerical values are:

q_1 = power density at the coolant tube outer surface (left side) = 6.54 W/cm^3

q_2 = power density at the separation tube inner surface (left side) = 7.28 W/cm^3

r_1 = outer coolant tube radius = 0.8 cm

r_2 = radius at the inner surface of the separation tube = 2.25 cm

With these numerical values one obtains:

$$T_{b\ max} - T_{b1} = 58.6^{o}C \tag{76}$$

With a procedure analogous to that outlined in Section 5.3 one obtains the temperature drop across the wall of the coolant tube:

$$\Delta T_{SS1} = 17.4^{o}C \tag{77}$$

and that across the separation tube:

$$\Delta T_{SS2} = 1.2^{o}C \tag{78}$$

The maximum temperature in the $ZrH_{1.7}$ moderator is calculated along the diagonal of the cell, on the left side of the cell where the power densities are the highest, using Eq.(69) of course with the proper densities and radii. The thermal conductivity of the moderator material at 390°C is 0.222 W/cm°C /20/. Also here the helium inlet temperature in the cooling tubes has been chosen equal to 225°C to ensure that the breeder material is molten. The calculation of the coolant tube temperatures and pressure drop is performed with the same equations used in Section 3. The results of all these calculations are shown in Table VI. All the results appear acceptable and are very similar to those obtained for the breeder/multiplier region (Section 5.3).

6. Assessment of Tritium Inventory for the Ceramic Blanket

Besides the heat transfer and neutronic calculations we deal here shortly with the problem of the tritium inventory, because this aspect is extremely important for the design of the blanket of a fusion reactor. The tritium inventory in the blanket and in the primary coolant circuit should be as small as possible. The first and most important is a safety reason: every gram of tritium has a radioactivy of 10^4 curie. Secondly, if the tritium inventory is small, the problem of tritium supply is easier (the amount of tritium immobilized in the reactor is smaller), however, for this the tritium breeding ratio is the most important factor.

We assume that during the reactor operation tritium is mainly stored in the breeding material, we neglect therefore the tritium possibly absorbed in the other blanket materials (steel, moderator and lead). According to Ref. /21/ and neglecting the tritium absorbed at the particle surface, the tritium inventory in a spherical particle is given by:

$$I_P = \frac{\dot{m}\, a^2}{15D} \qquad (79)$$

where: a = radius of the particle = 0.1 cm

$\dot{m}$ = number of tritium atoms produced per second in the particle

D = diffusivity coefficient of tritium in the particle in cm^2/s.

The value of $\dot{m}$ may be calculated as follows. From the neutronic calculations we obtain for the case with 30 % ^6Li enrichment the average number of tritium atoms produced per lithium atom and per second: 1.8×10^{-10} T/Li s. The density of Li in Li_2SiO_3 is given by:

$$\rho_{Li} = 2.53 \frac{2 \times 6.941}{2 \times 6.941 + 28.086 + 3 \times 16} = 0.3904 \text{ g/cm}^3 \qquad (80)$$

and the number of Li atoms in Li_2SiO_3 per cubic centimeter:

$$n_{Li} = \frac{0.3904}{\frac{6.941}{6.0225\times10^{23}}} = 0.3389\times10^{23}\ Li/cm^3 \qquad (81)$$

Thus the average tritium production per unit volume of blanket material is:

$$n_T = 0.3389\times10^{23}\times1.8\times10^{-10} = 0.610\times10^{13}\ T/cm^3s \qquad (82)$$

and $$\dot{m} = 0.610\times10^{13}\times\frac{4}{3}\pi\ 0.1^3 = 2.56\times10^{10}\ T/s \qquad (83)$$

The coefficient of diffusivity of tritium in ceramic materials is not well known. The value for Li_2SiO_3 suggested in the INTOR study (Ref. /1/, Table IX-3 page 442) is $2\text{-}5\times10^{-9}$ cm^2/s at 400°C, however in Ref. /21/ values are given which are an order of magnitude less than these. This discrepancy is explained by the fact that intercristalline diffusion is much faster than the diffusion inside the cristals themselves (This problem is discussed in more detail in Ref. /22/), thus a particle with many small cristals has a larger effective diffusivity than a particle made up of a few large cristals. A further complication is brought up by the irradiation effects at high temperatures: sintering, for instance, could produce a decrease of diffusivity. We have estimated the tritium diffusivity in the Li_2SiO_3 particles at 400-470°C as equal to 10^{-9} cm^2/s /22/, however we must say that this value is highly speculative. Due to the fact of his importance for the determination of the tritium inventory (it is inversely proportional to the tritium inventory, see Eq.(79)) future work on fusion blanket should be concentrated in the determination of D.

With the values discussed above the tritium per particle becomes:

$$I = \frac{2.56\times10^{10}\times0.1^2}{15\times10^{-9}} = 1.70\times10^{16} \text{ T/particle} \qquad (84)$$

thus the tritium mass per particle is given by:

$$m_T = 1.70\times10^{16}\ \frac{3.01605}{6.0225\times10^{23}} = 0.85\times10^{-7} \text{ g/particle} \qquad (85)$$

The inner surface area of the INTOR torus is 380 m^2. If we assume an 80% blanket coverage of this surface (see Section 2.2), the Li_2SiO_3 inventory in the blanket is given by:

$$I_{Li_2SiO_3} = 0.8\times380\times10^4\times2.53(0.4591\times18+0.1485\times18) = 8.4\times10^7 g = 84t \qquad (86)$$

Thus the number of Li_2SiO_3 particles is:

$$n_p = \frac{8.4\times10^7}{2.53\ \frac{4}{3}\ \pi\ 0.1^3} = 7.94\times10^9$$

and the total tritium inventory is:

$$I_{T1} = 7.94\times10^9\times0.85\times10^{-7} = 0.68\times10^3 \text{ g} = 0.68 \text{ kg}$$

This inventory is relatively high, but probably still acceptable.

The tritium inventory in the helium primary circuit is much smaller. We assume that the volume of the helium primary circuit is about the same of that of the German prototype THTR ($\approx$ 3200 m^3 /23/), because the thermal output of this fission reactor, 750 MW, is of the same order of magnitude of that of the INTOR reactor (380 $\times$1.3x1.25 = 620 MW). In the present case we have two helium

circuits of equal volume at an average pressure of 50 bar, one at an average temperature of 64°C and the other at an average temperature of 425°C. Thus the amount of helium in the circuit is:

$$V_{He} = 3200x50 \left[\frac{0.5x293}{337} + \frac{0.5x293}{698} \right] = 103000 \ Nm^3 \quad (87)$$

The helium purification plant of the Fort St. Vrain reactor keeps the amount of H_2O in the primary circuit at the level of 0.5 vppm /24/. If we assume the same impurity level here for T_2O, we obtain the following amount of tritium in the primary helium coolant:

$$I_{T2} = \frac{1.03x10^5x10^3}{22.4} x0.5x10^{-6}x2x3.016 = 14 \ g. \quad (88)$$

7. Conclusions

Neutronic and heat transfer calculations have been performed for helium cooled blankets for the INTOR design. The main results of the present paper may be summarized as follows:

1. The neutronic calculations show that the local tritium breeding ratios, both for the ceramic blanket (Li_2SiO_3) and for the liquid blanket ($Li_{17}Pb_{83}$) solutions, are 1.34 for natural lithium and about 1.45 when using 30 % Li^6 enrichment.

2. The heat transfer calculations show that it is possible to cool the divertor section of the torus (heat flux = 1.7 MW/ m^2) with helium with an inlet pressure of 52 bar and an inlet temperature of 40°C. The temperature of the back face of the

divertor can be kept at 130°C. With helium with the same inlet conditions it is possible to cool the first wall as well (heat flux = 0.136 MW/m^2) and keep the back face of this wall at a temperature of about 120°C.

3. For the ceramic blanket we use helium with 52 bar inlet pressure and 400°C inlet temperature to ensure sufficiently high temperatures in the breeder material. The maximum temperature in the pressure tubes containing the blanket is 450°C, while the maximum breeder particle temperature is 476°C.

4. The helium outlet temperatures (≈ 90 °C and 450 °C) have been chosen to keep the first wall and the blanket as cold as possible. As in the INTOR study we strive to have a design with a minimum, if still large, amount of material development work. It is quite clear that a power fusion reactor for electricity production would require higher temperatures to have an efficiency comparable to that of the fossile fuel fired plants. However also with these helium temperatures it is possible to produce electricity with proper designed steam turbines (without water preheating through bleeder steam).

5. For the cooling of the liquid blanket the helium inlet conditions are 25 bar and 225°C. The resulting maximum temperature of the $Li_{17}Pb_{83}$ breeder is 395°C, while the maximum temperature of the moderator ($ZrH_{1.7}$) is 409°C.

6. The arrangement proposed for the ceramic blanket with the breeder contained in perforated tubes promises an effective helium mass exchange between the breeder bed and the main helium flow. This, together with the possibility of keeping an extremely low level of impurities in the primary helium circuit, suggests that the tritium inventory in the coolant helium should be very small (of the order of a few grams). The tritium inventory in the breeder could be considerably higher. This inventory is inversely proportional to the tritium diffusivity in the particles and directly proportional to the square of the particle diameter. With particles of 2 mm in diameter this diffusivity should be $\geqslant 10^{-9}$ cm^2/sec (tritium inventory $\leqslant$ 0.7 kg).

Acknowledgement

The authors wish to thank M. Küchle for some useful discussions.

References

/1/ "INTOR, International Tokamak Reactor, Phase One", International Atomic Energy Agency, Vienna, 1982

/2/ Fusion engineering staff, General Atomic Company, "Doublet Demonstration Fusion Power Reactor Study", GA-A 14742, UC-20, July 1978.

/3/ S. Taczanowski, 12-th Soft Symposium on Fusion Technology, Jülich, 13-17 September 1982, Proceedings, pp. 681-686

/4/ S. Taczanowski, 11-th Soft Symposium on Fusion Technology, Oxford 15.-19. September 1980, Proceedings pp. 277-281

/5/ "USA Conceptual Design Contribution to the INTOR Phase-One Workshop", Rep. INTOR/81-1, Georgia Institute of Technology, Atlanta, GA, 1981.

/6/ T.R. Hill LA-5990-MS (1975)

/7/ by courtesy of the University of Wisconsin, Fusion Research Group

/8/ H.J. Pfriem, "Der turbulente Wärmeübergang an Helium und Wasserstoff in beheizten Rohren bei großen axial steigenden Temperaturdifferenzen und das sich daraus ergebende Temperaturprofil", KfK 1860, September 1973.

/9/ H. Schlichting, "Boundary Layer Theory", page 515, McGraw Hill, New York, Fourth Edition, 1960.

/10/ M. Dalle Donne and F.W. Bowditch,
"Experimental Local Heat Transfer and Friction Coefficient for the Flow of Air or Helium in a Tube at High Temperatures", O.E.C.D. High Temperature Reactor Project Dragon, D.P. Report 184, April 1963.

/11/ "INTOR, International Tokamak Reactor, Phase II^a, Critical Issues, European Contributions to the INTOR-Phase II^a Workshop", Vol.III, Commission of the European Communities, Brussels, December 1982

/12/ W. Baumann, V. Casal, H. Hoffmann, R. Möller and K. Rust
"Brennelemente mit wendelförmigen Abstandshaltern für Schnelle Brutreaktoren", KfK 768, EUR 2694d, April 1968.

/13/ A.C. Rapier, S.C. Snook and T.B. Burgoyne,
"Heat Transfer and Fluid Flow Work in Support of GCFR", UK-R36, NEA-GCFR System Meeting, AEE Winfrith, November 1974.

/14/ W.E. Olbrich and O.E. Potter,
"Heat Transfer in Small Diameter Packed Beds", Chem. Engineering Science, 27, 1972, 1723-1732.

/15/ G. Erben,
"Messung des Wärmeübergangs und des Druckverlustes von gasdurchströmten Kugelpackungen und dessen Abhängigkeit von Packungsdichte und Temperatur", KfK Ext. Bericht 4/67-10, Kernforschungszentrum Karlsruhe, Juni 1967.

/16/ Gmelin's Handbuch der anorganischen Chemie, Blei, Pb(B1)47, S.250, Verlag Chemie, Weinheim/Bergstraße, 1966.

/17/ K. Rehme,
"Systematische experimentelle Untersuchung der Abhängigkeit des Druckverlustes von der geometrischen Anordnung für längs durchströmte Stabbündel mit Spiraldrahtabstandshaltern", KfK Ext. Bericht 4/68-16, Kernforschungszentrum Karlsruhe, Februar 1968.

/18/ C.B. Baxi and M. Dalle Donne,
"Helium Cooled Systems: The Gas-cooled Fast Breeder Reactor",
p. 429 in "Heat Transfer and Fluid Flow in Nuclear Systems"
ed. by H. Fenech, Pergamon Press, New York, Dec. 1981.

/19/ R. Fehling,
"Der Strömungswiderstand ruhender Schüttungen",
Feuerungstechnik, 27, 2, 3-43, 1939.

/20/ Dr. Willinger, Interatom, Bensberg, Private communication,
Dec. 1982.

/21/ K. Okula and D.K. Sze,
"Tritium Recovery from Solid Breeders: Implications of the
Existing Data", Proc. Tritium Technology in Fission, Fusion
and Isotopic Application, L.J. Wittenberg (comp.), Dayton,
Ohio, 29. April - 1. May 1980, p.286.

/22/ M. Dalle Donne and S. Dorner
Kernforschungszentrum Karlsruhe, Unpublished Report, March 1983.

/23/ Dr. Vollmer,
BBC, Mannheim, Private communication, June, 1983

/24/ H.G. Olson, H.L. Brey and F.E. Swart,
"The Fort St. Vrain High Temperature Gas Cooled Reactor. VI.
Evaluation and Removal of Primary Coolant Contaminants",
Nuclear Engineering and Design, 61, 1980, 315.

Table II: Ceramic Blanket. First Wall-Multiplier.
Results of Heat Transfer Calculations

	First wall side cooling	Right side cooling
Cooling tube inner diameter (cm)	0.6	0.3
Cooling tube thickness (cm)	0.03	0.015
Tube pitch (cm)	0.76	0.33
Tube length (cm)	200	200
Helium inlet pressure (bar)	52	52
Helium mass flow per tube (g/s)	30.9	5.0
Helium av. velocity (cm/s)	1.54×10^4	0.98×10^4
Velocity head (bar)	0.84	0.35
Pressure drop (bar)	4.0	4.2
Helium inlet temperature (^oC)	40	40
Helium outlet temperature (^oC)	89.6	83.0
Heat transfer coefficient ($W/cm^2\ ^oC$)	1.25	1.01
Max. tube wall temperature (^oC)	105	94.7

Table III: Ceramic Blanket. Breeder-Breeder/Moderator.
Results of Heat Transfer Calculations

	Breeder in Breeder Section	Moderator in Breeder/Moderator Section
Rod outer diameter (cm)	2	2
Rod pitch (cm)	2.1	2.1
Rod cladding thickness (cm)	0.03	0.05
Breeding or moderating material	Li_2SiO_3	$ZrH_{1.7}$
Particle diameter (cm)	0.2	-
Rod length (cm)	200	200
Coolant channel hydraulic diameter (cm)	0.2022	0.2022
Helium inlet pressure (bar)	52	52
Helium mass flow per coolant channel (g/s)	7.25	10.75
Helium average velocity (cm/s)	6358	9431
Pressure drop (bar)	4.56	4.56
Helium inlet temperature (^oC)	400	400
Helium outlet temperature (^oC)	450 (hot portion)	429 (hot portion)
Heat transfer coefficient ($W/cm^2\ ^oC$)	1.00	0.581
Max. tube wall temperature (^oC)	453	433
Max. bed or moderator temperature (^oC)	476	440

Table IV: Liquid Breeder Blanket. First Wall. Results of Heat Transfer Calculations

Cooling tube inner diameter (cm)	0.6
Cooling tube thickness (cm)	0.03
Tube pitch (cm)	0.76
Tube length (cm)	200
Helium inlet pressure (bar)	52
Helium mass flow per tube (g/s)	25.1
Helium average velocity (cm/s)	1.20×10^4
Velocity head (bar)	0.52
Pressure drop (bar)	2.6
Helium inlet temperature (^oC)	40
Helium outlet temperature (^oC)	87
Heat transfer coefficient ($W/cm^2\ ^oC$)	1.03
Max. tube wall temperature (^oC)	110.5
Max. first wall back-face temperature (^oC)	120

Table V Liquid Breeder Blanket. Breeder/Multiplier. Results of the Heat Transfer Calculations

Cooling tube inner diameter (cm)	1.0
Cooling tube thickness (cm)	0.1
Tube pitch (cm)	3.33
Tube length (cm)	200
Helium inlet pressure (bar)	25
Helium mass flow per tube (g/s)	40.9
Helium average velocity (cm/s)	2.38×10^4
Velocity head (bar)	0.62
Pressure drop (bar)	2.08
Helium inlet temperature (^oC)	225
Helium outlet temperature (^oC)	285
Heat transfer coefficient ($W/cm^2\ ^oC$)	0.66
Max. tube wall temperature (^oC)	318
Max. $Li_{17}Pb_{83}$ temperature (^oC)	394

Table VI: Liquid Breeder Blanket. Breeder/Moderator. Results of the Heat Transfer Calculations

Cooling tube inner diameter (cm)	1.4
Cooling tube thickness (cm)	0.1
Tube pitch (cm)	5.0
Tube length (cm)	200
Helium inlet pressure (bar)	25
Helium mass flow per tube (g/s)	106.5
Helium average velocity (cm/s)	3.15×10^4
Velocity head (bar)	1.09
Pressure drop (bar)	2.21
Helium inlet temperature (^oC)	225
Helium outlet temperature (^oC)	275
Heat transfer coefficient ($W/cm^2\ ^oC$)	0.77
Max. tube wall temperature (^oC)	319
Max. $Li_{17}Pb_{83}$ temperature (^oC)	395.5
Max. $ZrH_{1.7}$ temperature (^oC)	409

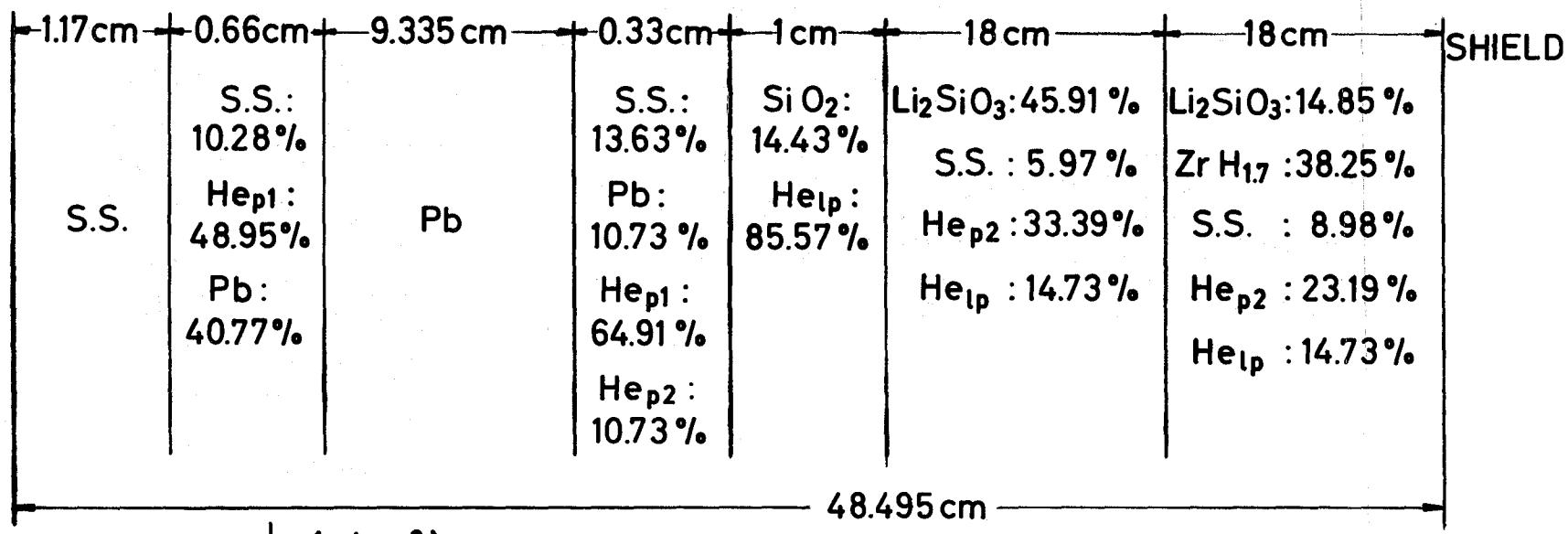

	ρ (g/cm^3)
He_{p1}	7.167×10^{-3}
He_{p2}	1.722×10^{-3}
He_{lp}	0.689×10^{-4}
S.S.	7.89
Pb	11.35
Li_2SiO_3	2.53
$ZrH_{1.7}$	5.63
SiO_2	2.19

S.S.	C	Cr	Ni	Mo	Fe
AISI 316 L	0.03	17	12	2.125	REST
WEIGHT PERCENTAGES					

Fig.1: Ceramic blanket: material data distribution for the neutronic calculations.

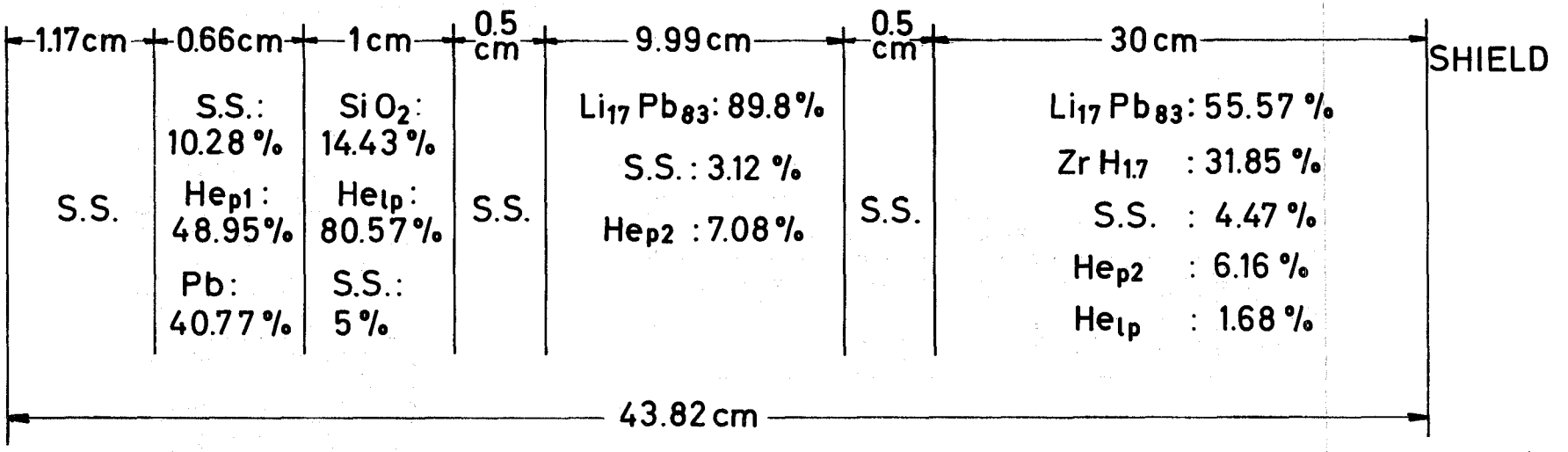

	ρ (g/cm^3)
He_{p1}	7.167×10^{-3}
He_{p2}	3.233×10^{-3}
He_{lp}	0.689×10^{-4}
S.S.	7.89
Pb	11.35
$Li_{17}Pb_{83}$	10.6
$ZrH_{1.7}$	5.63
SiO_2	2.19

S.S.	C	Cr	Ni	Mo	Fe
AISI 316 L	0.03	17	12	2.125	REST
WEIGHT PERCENTAGES					

Fig.2: Liquid breeder blanket: material data distribution for the neutronic calculations.

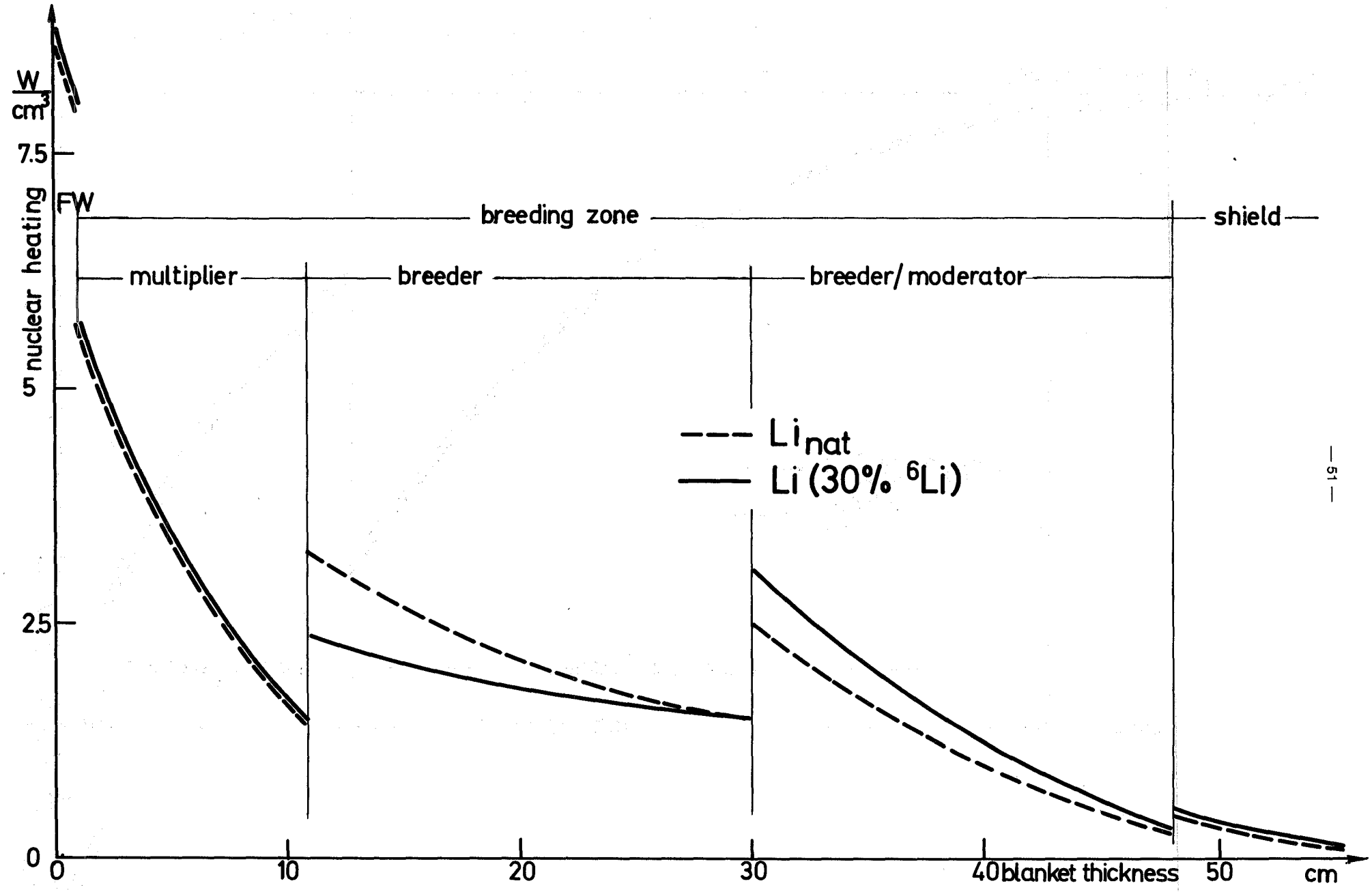

Fig.3: Ceramic blanket: nuclear heating distribution for a neutron wall load of 1 MW/m^2.

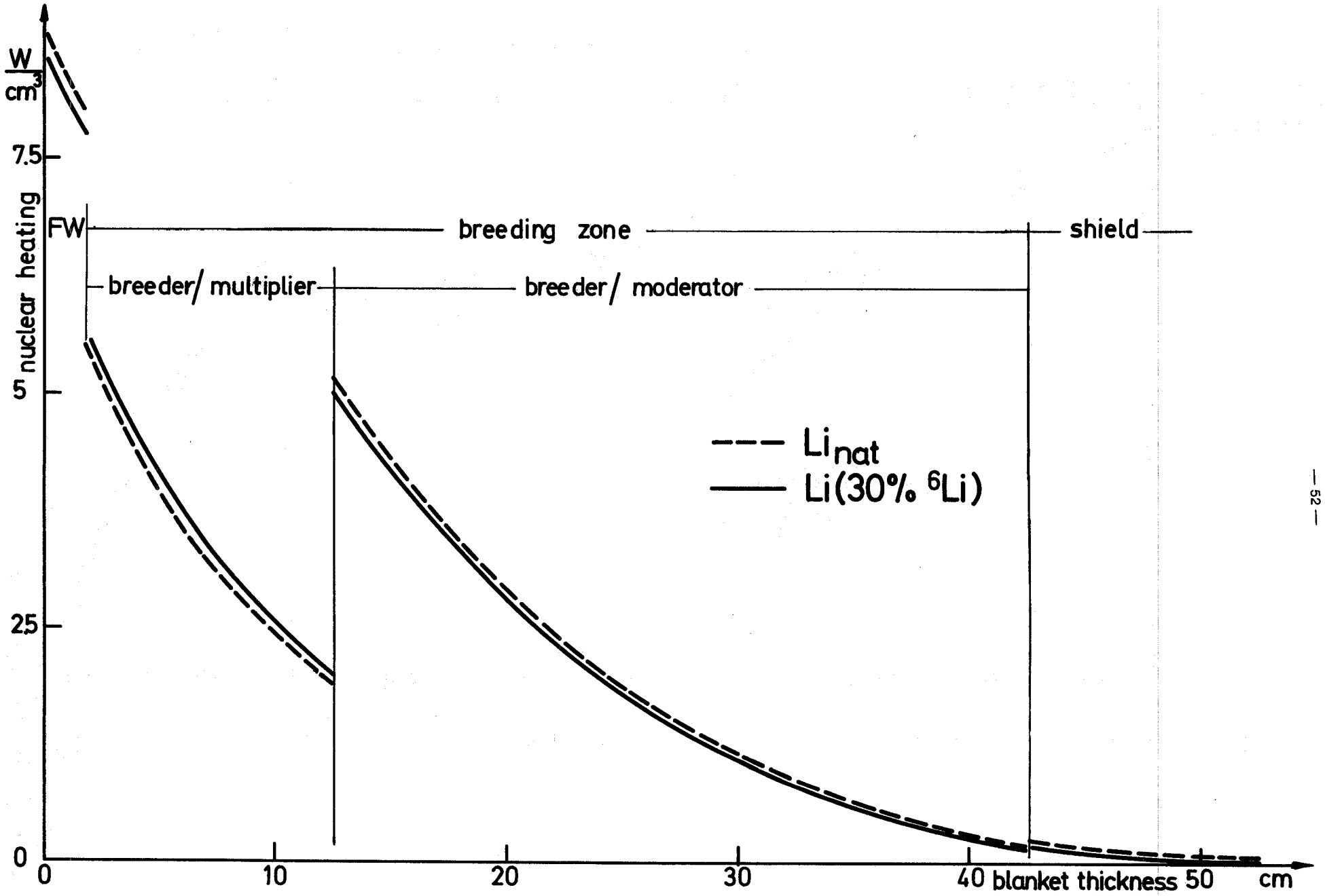

Fig.4: Liquid breeder blanket: nuclear heating distribution for a neutron wall load of 1 MW/m^2.

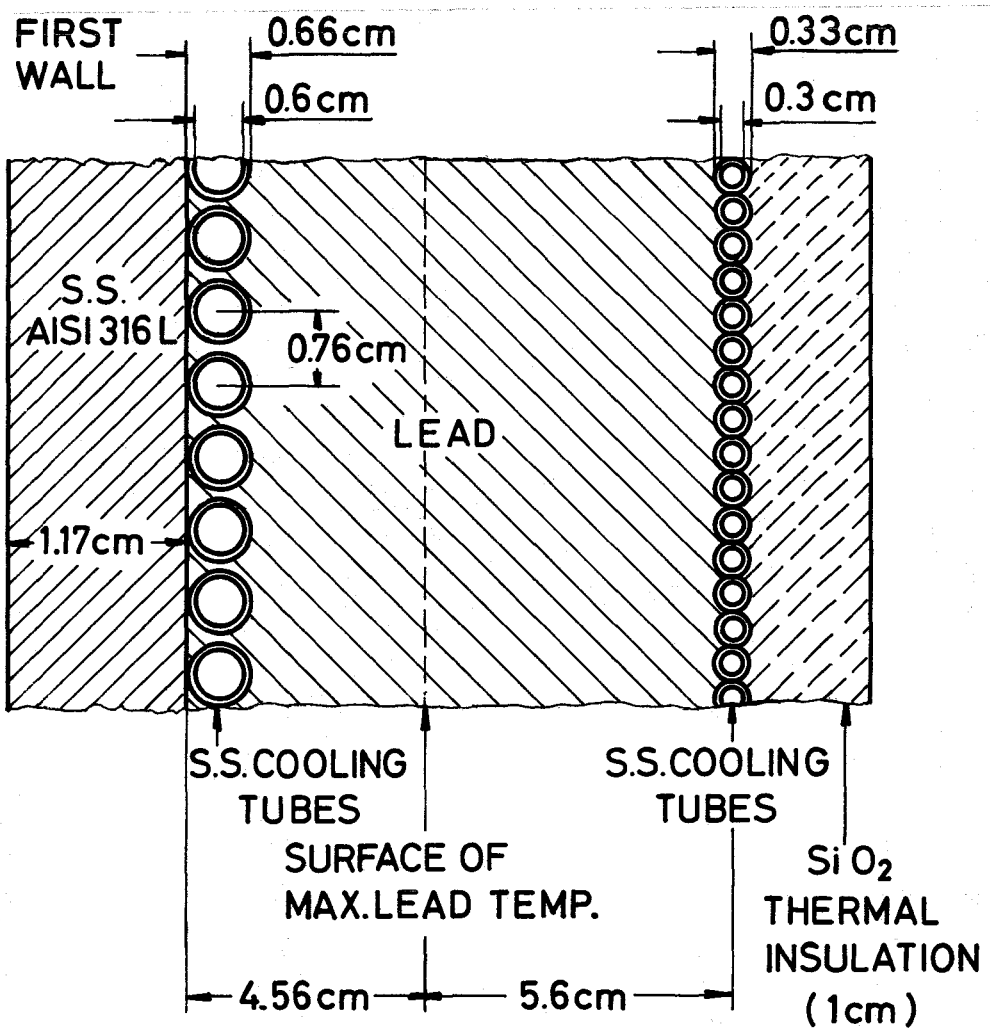

Fig.5: Ceramic blanket: First wall and multiplier section.

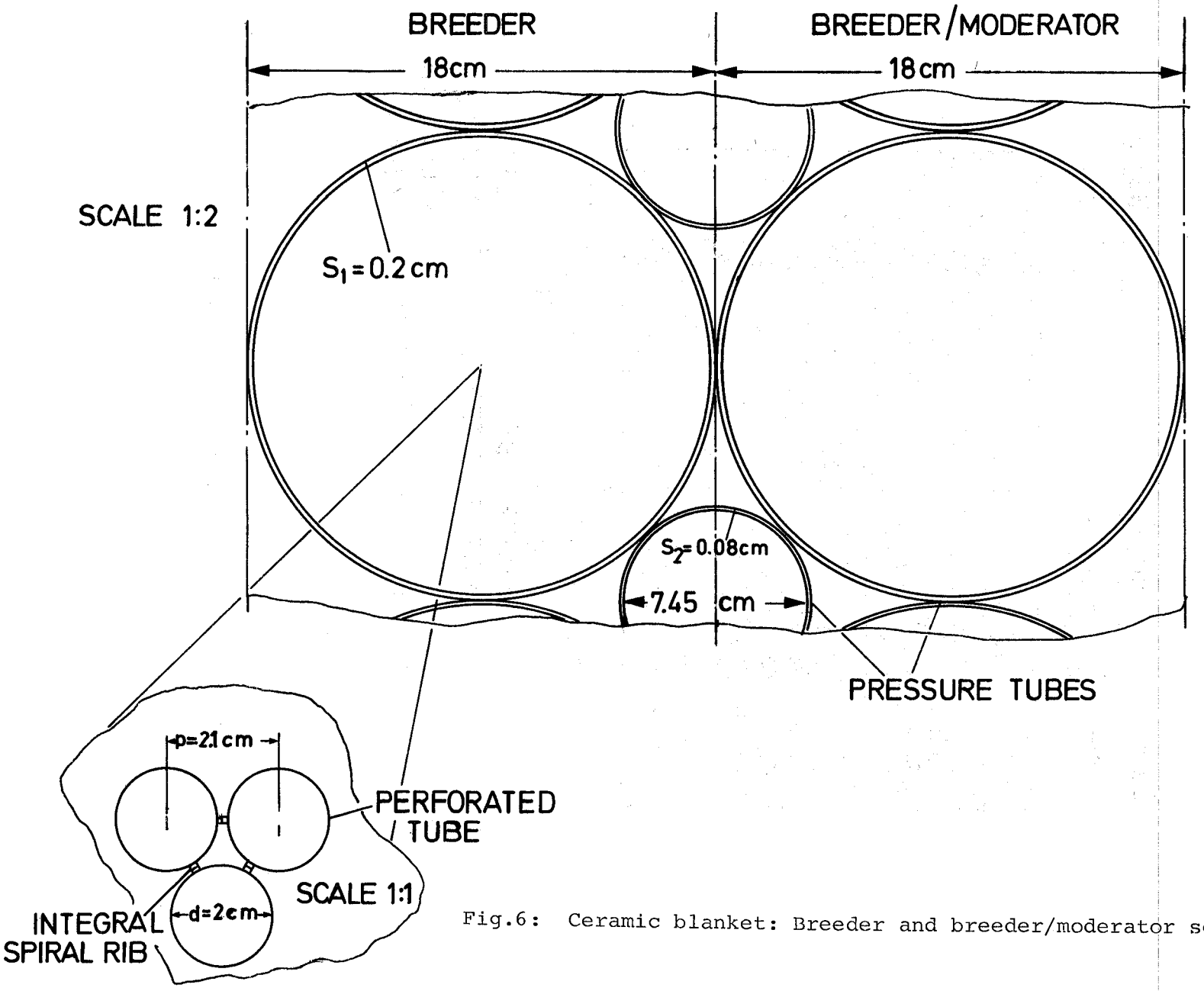

Fig.6: Ceramic blanket: Breeder and breeder/moderator section.

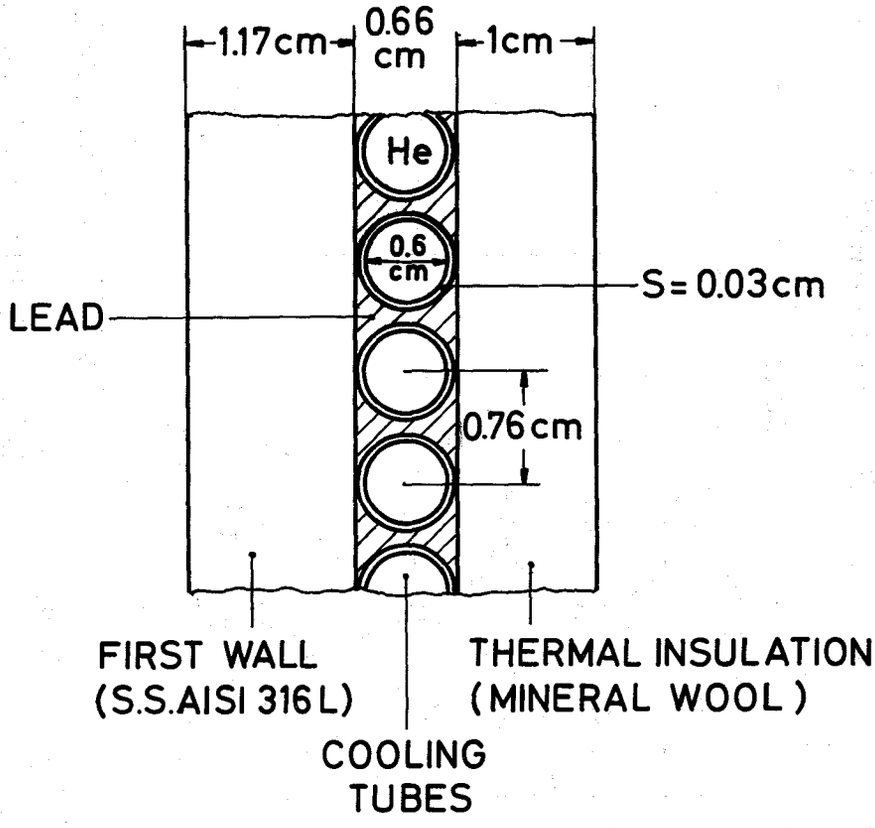

Fig.7: Liquid breeder blanket: first wall and relative cooling system.

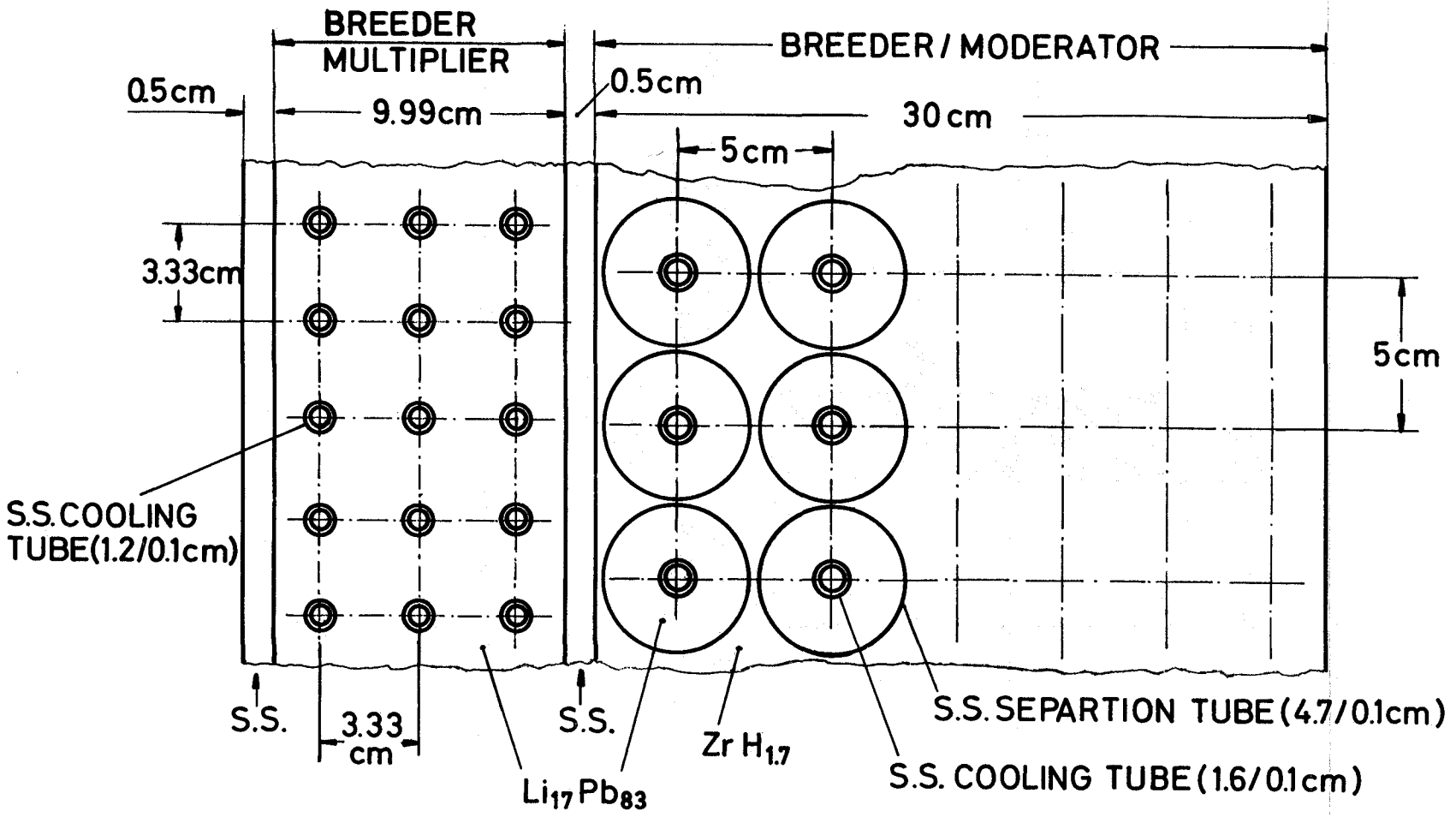

Fig.8: Liquid breeder blanket: breeder/multiplier and breeder/moderator sections.