KfK 3734
Mai 1984

Control Program of the Neutron Four-Circle-Diffractometer P110 at the ORPHEE Reactor/ CEN Saclay

H. Guth, W. Reimers, G. Heger, H. Paulus
Institut für Nukleare Festkörperphysik

Kernforschungszentrum Karlsruhe

KERNFORSCHUNGSZENTRUM KARLSRUHE

Institut für Nukleare Festkörperphysik

KfK 3734

CONTROL PROGRAM OF THE NEUTRON FOUR-CIRCLE-DIFFRACTOMETER P110 AT THE ORPHEE REACTOR/CEN SACLAY

H. Guth[a)], W. Reimers, G. Heger, H. Paulus[b)]

Kernforschungszentrum Karlsruhe GmbH, Karlsruhe

---

a) SFB127: Kristallstruktur und Chemische Bindung, Institut für Mineralogie d. Univ. Marburg u. Gast am INFP/KfK

b) Inst. f. Physik. Chemie (Strukturforschung) TH Darmstadt

Als Manuskript vervielfältigt
Für diesen Bericht behalten wir uns alle Rechte vor

Kernforschungszentrum Karlsruhe GmbH
ISSN 0303-4003

ABSTRACT

The four-circle diffractometer P110 for elastic neutron scattering on single crystals was installed at the ORPHEE reactor / CEN Saclay in 1982. The control program, presented here, is a new update of the former program versions used at the FR2 reactor / Kernforschungszentrum Karlsruhe. Important improvements concerning reliability and handling of the diffractometer are added.

STEUERPROGRAMM DES NEUTRONEN VIERKREIS-DIFFRAKTOMETERS P110 AM ORPHEE-REAKTOR / CEN SACLAY

ZUSAMMENFASSUNG

Das Vierkreisdiffraktometer P110 für elastische Neutronenstreuung an Einkristallen wurde 1982 am ORPHEE / CEN Saclay aufgebaut. Das hier beschriebene Steuerprogramm ist durch Weiterentwicklung der Programme, die früher am FR2-Reaktor / Kernforschungszentrum Karlsruhe in Benutzung waren, entstanden. Die dabei erzielten wesentlichen Verbesserungen wirken sich insbesondere auf die Zuverlässigkeit des Diffraktometerbetriebes und den Bedienungskomfort aus.

Contents

	Page
Introduction	1
General Instruction	5
List of the Console Commands (CC)	10
Description of the Console Commands (CC)	12
Appendix I : Diffractometer Control Program (BASIC)	40
Appendix II : TV-Program (BASIC)	86
Appendix III : CALL-Routines	90
Appendix IV : Error Messages	97

Introduction

For solid state research detailed informations about crystal structure and magnetic ordering are important. In many cases the relevant data can be obtained only by neutron diffraction on single crystals. For these measurements today automatic four-circle diffractometers are used.

The program presented here, was developed from control programs of automatic X-ray four-circle diffractometers in order to make use of the know-how available in this field. Furthermore, we hope that users who are familiar with equivalent X-ray instruments may easily work with our single crystal neutron diffractometers. The hardware configuration (given in /1/) was chosen such as to run the instruments and to register the complete data on magnetic tape in a stand-alone version.

After being in use for about 5 years at the FR2 reactor / Kernforschungszentrum Karlsruhe, the four-circle diffractometer P110 was installed at the $5C_2$ beam hole (hot source) of the ORPHEE reactor/CEN Saclay in 1982. The control program presented here, is a new update of former program versions. Important improvements concerning reliability and handling of the diffractometer are added.

A General Instruction including information how to communicate with the computer is followed by a detailed description of the so-called Console Commands (CC). A listing of the BASIC source programs and the CALL routines is given in the Appendix.

At the end of this introduction we show a very brief and simplified scheme for operating the instrument in a routine manner.

/1/ G. Heger, S. Massing, H. Guth, W. Reimers, H. Paulus:
Das Vierkreisdiffraktometer P110/FR2 für Neutronenbeugungsuntersuchungen an Einkristallen
KfK 3212 (1981)

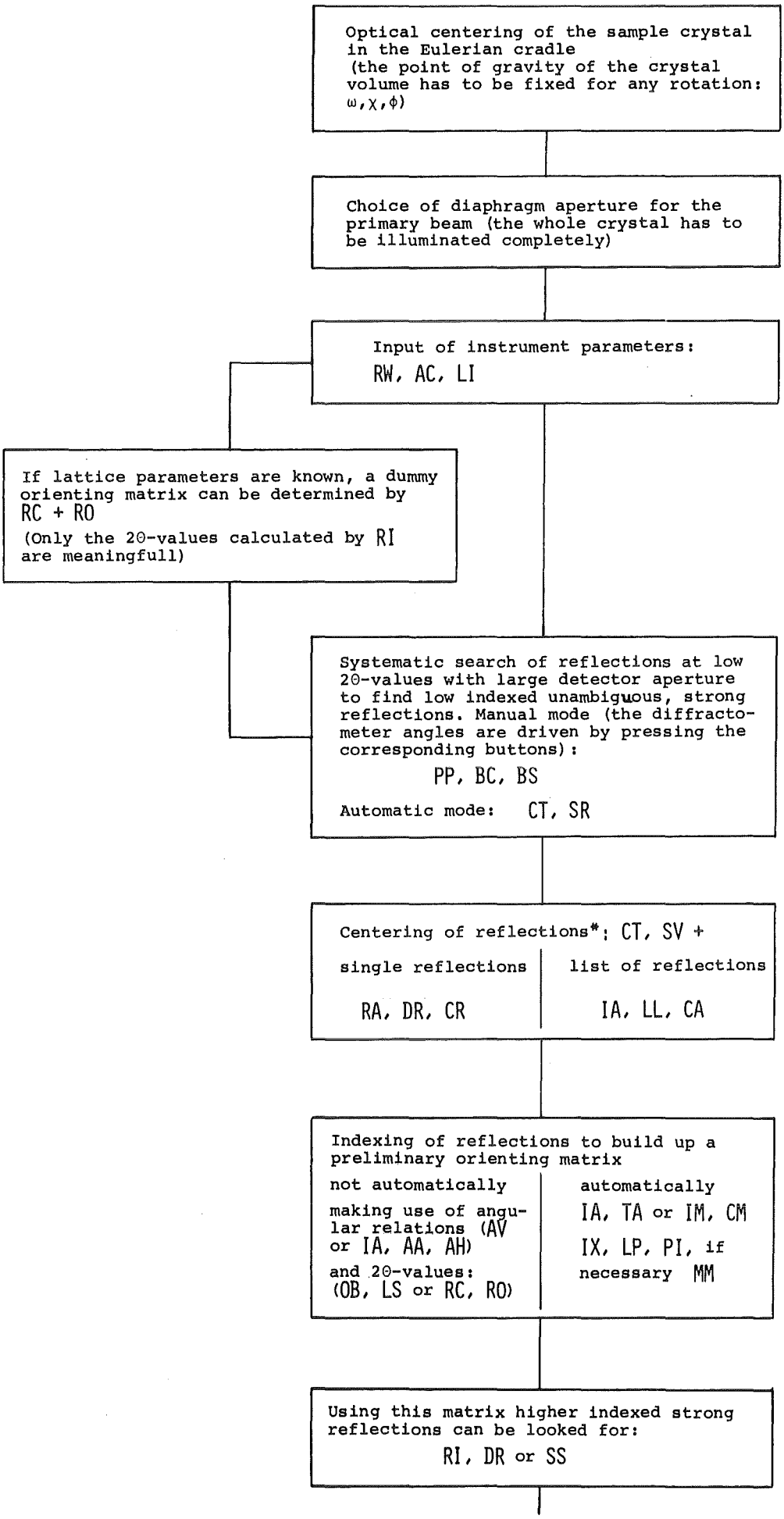
Optical centering of the sample crystal in the Eulerian cradle (the point of gravity of the crystal volume has to be fixed for any rotation: ω, χ, φ)
Choice of diaphragm aperture for the primary beam (the whole crystal has to be illuminated completely)
Input of instrument parameters: RW, AC, LI
If lattice parameters are known, a dummy orienting matrix can be determined by RC + RO (Only the 2θ-values calculated by RI are meaningfull)
Systematic search of reflections at low 2θ-values with large detector aperture to find low indexed unambiguous, strong reflections. Manual mode (the diffractometer angles are driven by pressing the corresponding buttons): PP, BC, BS
Automatic mode: CT, SR
Centering of reflections*: CT, SV +
single reflections
RA, DR, CR
list of reflections
IA, LL, CA
Indexing of reflections to build up a preliminary orienting matrix
not automatically
making use of angular relations (AV or IA, AA, AH)
and 2θ-values: (OB, LS or RC, RO)
automatically
IA, TA or IM, CM
IX, LP, PI, if necessary MM
Using this matrix higher indexed strong reflections can be looked for: RI, DR or SS

To build up a more reliable orienting matrix strong reflections in the range

$2\Theta_{Mon} - 10^{o} \lesssim 2\Theta \lesssim 2\Theta_{Mon} + 10^{o}$

distributed over the whole reciprocal space (e.g. symmetry equivalent reflections) are centered*:

The straight forward procedure to refine a preliminary orienting matrix leads via LR, MR to LS. In case a suitable list of reflections is already centered (IA, CA, LL, DA), e.g. in preparation of IX, the data can be transferred (TA) and used via RF, CE to LS.

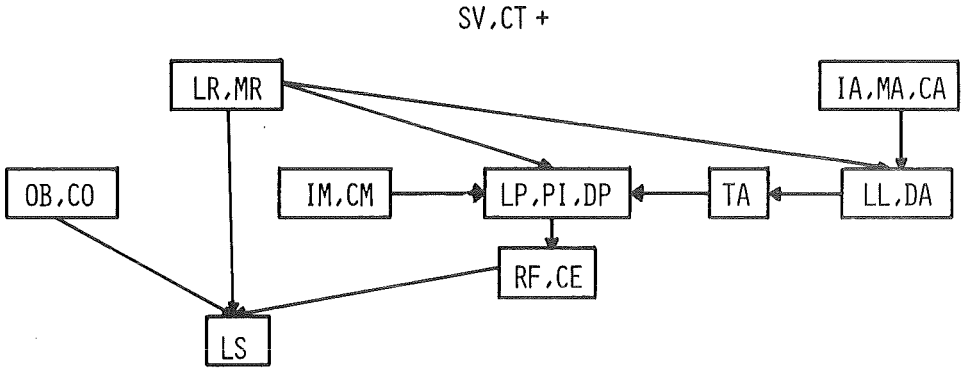

Print out of refined orienting matrix and lattice constants:

PM, PC or PL

Test of reflection profiles, halfwidths and intensities at different 2θ-values

CT, SV, SS

Establishing of parameters for the automatic data collection:

CT, SV, SF

(e.g. choice of OMEGA:X*THETA-coupling), VR

Selection of detector aperture

Selection of standard reflections: IS

The measuring region is defined by {HKL} limits (checked by RI), LI and the 2θ-range. The number of reflections to be measured under the given conditions is calculated by CN.

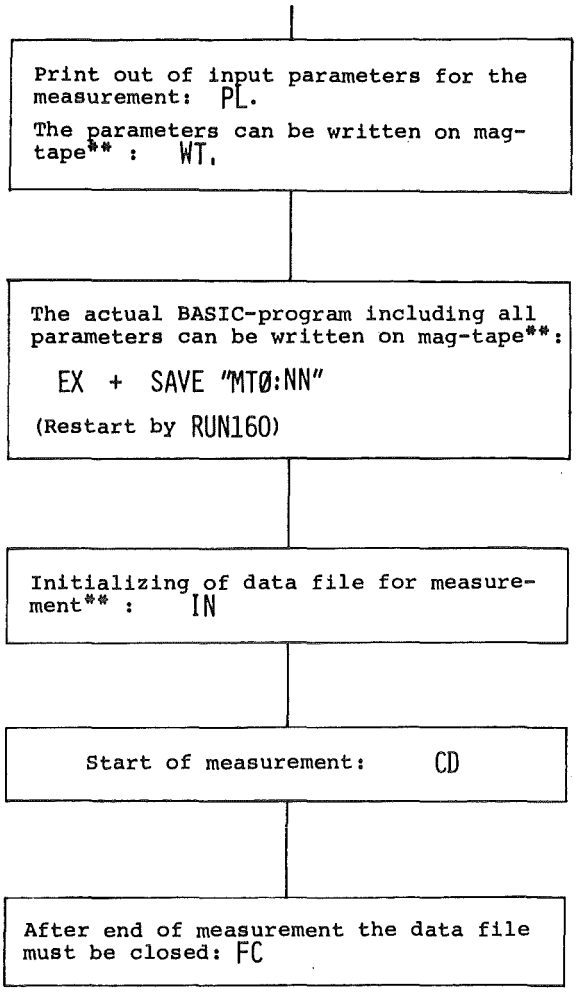

*For the centering of the reflection angles 2θ, ω and χ it is recommended to use a very small detector aperture.

**Attention! If a filenumber NN is already used, the data on files ≥ NN can never be read again. Therefore, it is extremely important to take care in using ascending file-numbers.

GENERAL INSTRUCTION

THE FOUR CIRCLE DIFFRACTOMETER IS CONTROLLED BY A DATA GENERAL NOVA 2/1ϕ COMPUTER WITH 32K CORE MEMORY. THE CONTROL PROGRAM IS WRITTEN IN THE PROGRAMMING LANGUAGE "EXTENDED BASIC". THIS LANGUAGE COMBINES EASY PROGRAMMING WITH THE POSSIBILITY OF ON LINE PROGRAM CHANGES.

THE BASIC PROGRAM CONSISTS OF TWO PARTS:

1) THE BASIC SYSTEM

THE BASIC SYSTEM IS A PROGRAM WHICH INTERPRETS THE BASIC SOURCE PROGRAM: IT GENERATES FROM THE SOURCE A MACHINE CODE PROGRAM AND EXECUTES IT. EMBEDDED IN THE BASIC SYSTEM ARE SUBROUTINES WHICH ARE ESPECIALLY PREPARED FOR THE DIFFRACTOMETER CONTROL; THIS ROUTINES ARE EXECUTED VIA CALL STATEMENTS IN THE BASIC SOURCE.

2) THE BASIC SOURCE

THE BASIC SOURCE PROGRAM IS THE ACTUAL CONTROL PROGRAM FOR THE DIFFRACTOMETER. IT CONSISTS OF A SERIES OF BASIC STATEMENTS (COMPARE LISTING), WHICH REQUEST THE NECESSARY INPUT DATA, PERFORM THE CALCULATIONS, OPERATE THE DIFFRACTOMETER ETC. THESE DIFFERENT TASKS ARE INITIATED BY GIVING "CONSOLE COMMANDS" AT THE CONSOLE.

THE CONSOLE COMMANDS

THE DIFFRACTOMETER IS OPERATED THROUGH SO-CALLED CONSOLE COMMANDS (CC). THESE CC'S ARE PARTS OF THE PROGRAM WHICH PERFORM CERTAIN FUNCTIONS: INPUT OF PARAMETERS, ARITHMETIC CALCULATIONS, OPERATIONS OF THE DIFFRACTOMETER ETC.

CC'S ARE CALLED IN BY TYPING AT THE CONSOLE THE TWO LETTERS OF THE COMMAND FOLLOWED BY A CARRIAGE RETURN; THE COMPUTER THEN PERFORMS THE REQUESTED OPERATION.

IF A CC REQUIRES THE INPUT OF DATA, A ? IS PRINTED ON THE CONSOLE. THE USER THEN TYPES IN HIS DATA, EACH INPUT TERMINATED BY A CARRIAGE RETURN.

WHEN THE COMPUTER HAS FINISHED ONE CC, IT TYPES # TO INDICATE THAT ANOTHER CC CAN BE GIVEN.

TO INTERRUPT AN EXECUTING CC, ONE PRESSES ESCAPE AT THE CONSOLE, THE COMPUTER IMMEDIATELY ANSWERS # AND WAITS FOR A NEW COMMAND. (SEE ALSO COMMAND SP.)

IF TWO LETTERS ARE INPUT, WHICH DO NOT CORRESPOND TO AN EXISTING CC, THE COMPUTER TYPES "NOT A CC" AT THE CONSOLE.

CC'S MAY BE GIVEN IN ANY ORDER; IF CERTAIN CC'S ARE REQUESTED BEFORE OTHERS, THIS IS STATED IN THE DESCRIPTION OF THE SINGLE COMMANDS (PREREQUISITE: CC...).

LOADING AND STARTING THE DIFFRACTOMETER CONTROL PROGRAM

(COMPARE ALSO THE APPROPRIATE MANUALS FOR THE COMPUTER.)
THE DIFFRACTOMETER CONTROL PROGRAM IS SUPPLIED TO THE USER ON MAGNETIC TAPE.

THIS MAGNETIC TAPE CONTAINS FOUR FILES:

1) CORE IMAGE LOADER WRITER (CILW) (SEE NOTE),

2) BASIC SYSTEM,

3) BASIC SOURCE OF THE DIFFRACTOMETER CONTROL PROGRAM,

4) BASIC SOURCE OF THE TV-PROGRAM.

NOTE: CORE IMAGE LOADER WRITER (CILW) IS A PROGRAM WHICH SAVES PROGRAMS AS CORE IMAGES ON MAGNETIC TAPE AND LOADS THE SAVED PROGRAM INTO THE COMPUTER.

TO LOAD THE PROGRAM INTO AN 'EMPTY' COMPUTER, EXECUTE THE FOLLOWING STEPS:

1) SWITCH ON POWER AT COMPUTER, MAGTAPE AND CONSOLE.

2) LOAD THE SUPPLIED TAPE REEL:
   - A) MOUNT TAPE REEL ON SUPPORT,
   - B) THREAD TAPE THROUGH DRIVE ONTO TAKEUP REEL,
   - C) WRAP FEW WINDINGS OF TAPE ONTO THE TAKEUP REEL,
   - D) PRESS LOAD
   - E) PRESS ON LINE AT THE MAGTAPE FRONT PANEL.

3) LOAD THE CILW:
   - A) SET 1ØØØ22 INTO THE COMPUTER SWITCH REGISTER,
   - B) PRESS RESET,
   - C) PRESS PROGRAM LOAD AT THE COMPUTER FRONT PANEL. CILW IS READ IN FROM THE TAPE NOW, IT TYPES ↯ AT THE CONSOLE.

4) LOAD THE BASIC SYSTEM:
   - A) RESPOND TO THE ↯ TYPED BY THE CILW BY TYPING 1 (CR) (CR: CARRIAGE RETURN), THE BASIC SYSTEM IS NOW LOADED FROM TAPE, IT STARTS AUTOMATICALLY AND IDENTIFIES ITSELF:

     BASIC REVISION 9.4 (KARLSRUHE) 11/23/79

B) BASIC NOW ASKS:
ERROR MESSAGE TEXT ?
RESPOND WITH N (NO)

C) BASIC TYPES:
DATE: MM-DD-YY
ENTER MONTH:DAY:YEAR (CR)

D) TIME: HH:MM ENTER HOUR:MINUTES (CR).
BASIC NOW TYPES:
MONTH/DAY/YEAR HOUR:MINUTES SIGN ON, SC

*

THE * INDICATES THAT THE BASIC SYSTEM IS OPERATING NOW.

5) LOAD THE BASIC SOURCE PROGRAM:

A) TYPE IN:
ENTER "MTØ:2" (CR)
TO LOAD THE DIFFRACTOMETER CONTROL PROGRAM

B) OR:
ENTER "MTØ:3" (CR)
TO LOAD THE TV CONTROL PROGRAM

THE SOURCE PROGRAM WILL BE LOADED FROM TAPE TO THE COMPUTER, AT TERMINATION BASIC AGAIN TYPES *.
THE TAPE REEL CAN NOW BE REMOVED FROM THE TAPE UNIT.

6) START THE PROGRAM:
TYPE IN: RUN (CR)

A) COMPUTER TYPES ↯ TO INDICATE THAT IT IS READY TO ACCEPT CONSOLE COMMANDS.

B) COMPUTER TYPES:
DATA-FILE (MTØ:Ø → MTØ:99):
TYPE IN: MTØ:NN (CR)
IF THE TV IS SWITCHED ON AND THERE IS A CONNECTION FROM THE TV TO THE COMPUTER, THE PROFILE OF THE FIRST REFLECTION IS SHOWN ON THE TV.

TO CHECK THE NEXT REFLECTION, PRESS THE CTRL- AND THE S-KEY TOGETHER.

TO GET OUT OF THE PROGRAM, PRESS ESCAPE.

RESTART PROCEDURES

IF THE COMPUTER IS STOPPED, IT CAN BE RESTARTED BY:
A) SET ØØØ377 INTO THE SWITCH REGISTER,
B) PRESS RESET,
C) PRESS START.

THE SYSTEM PRINTS:

DATE: MM-DD-YY
GO BACK TO STEP 4, C OF THE LOAD SEQUENCE FOR CONTINUATION.

IF THE BASIC SYSTEM IS DAMAGED, BUT THE CILW REMAINS INTACT, ONE MAY RESTART BY:
A) SET Ø77777 INTO THE SWITCH REGISTER,
B) PRESS RESET,
C) PRESS START.

CILW PRINTS ⇹

CONTINUE AT STEP 4, A OF THE LOAD PROCEDURE ABOVE.

RETURN TO THE BASIC SYSTEM

THERE ARE TWO POSSIBILITIES TO GO FROM THE DIFFRACTOMETER CONTROL PROGRAM BACK TO THE BASIC SYSTEM:

1) GIVE THE CONSOLE COMMAND EX (EXIT)

THIS COMMAND EX GIVES THE USER AN OPPORTUNITY TO GIVE PROGRAM CONTROL BACK TO THE BASIC SYSTEM. THE BASIC SYSTEM TYPES:

STOP AT Ø2Ø7
*
THE USER MAY NOW MAKE PROGRAM CHANGES, SAVE HIS PROGRAM ON TAPE, LIST PARTS OF THE PROGRAM ETC.; IN SHORT: HE CAN EXECUTE ALL BASIC COMMANDS. TO RETURN TO THE DIFFRACTOMETER CONTROL PROGRAM HE GIVES THE COMMAND: RUN 15Ø (CR) AND THE PROGRAM WILL TYPE ⇹ AND WAIT FOR CONSOLE COMMANDS.

2) ERROR EXIT

IF THE BASIC SYSTEM DETECTS AN ERROR DURING CALCULATIONS OR INPUT/OUTPUT OPERATIONS IT TYPES:

ERROR NN - COMMENT
*
(NN: ERROR NUMBER, COMMENT IS OPTIONAL, DEPENDING ON THE ANSWER TO THE QUESTION "ERROR MESSAGE TEXT?" DURING LOADING OF THE PROGRAM)
THE USER HAS THE SAME POSSIBILITIES AS DESCRIBED ABOVE FOR MODIFICATION AND RESTARTING OF THE DIFFRACTOMETER PROGRAM.

SAVING OF BASIC SOURCE PROGRAMS

BASIC SOURCE PROGRAMS MAY BE SAVED ON MAGTAPE IN ONE OF TWO WAYS:

1) SAVE ONLY THE SOURCE LISTING BY GIVING THE COMMAND
   LIST "MTØ:NN" (CR)
   (MTØ:NN MEANS: FILE NUMBER NN ON MAGTAPE UNIT Ø; FIRST FILE ON TAPE HAS THE FILE NUMBER Ø!)

2) SAVE THE SOURCE PROGRAM TOGETHER WITH ALL VARIABLES BY GIVING THE COMMAND
   SAVE "MTØ:NN" (CR)

BY THE SECOND METHOD, THE STATUS OF THE DIFFRACTOMETER CAN BE SAVED ON TAPE WITH ALL PREVIOUSLY DEFINED PARAMETERS, THE PROGRAM CAN BE INTERRUPTED FOR ANOTHER JOB, THE SAVED PROGRAM CAN BE REINSTALLED LATER AS DESCRIBED IN THE NEXT SECTION.

RESTORING SAVED SOURCE PROGRAMS

PROGRAMS WHICH WERE BROUGHT TO MAGTAPE WITH THE LIST-COMMAND ARE RESTORED BY THE COMMAND: ENTER "MTO:NN" (CR).

THESE PROGRAMS ARE STARTED BY: RUN (CR).

PROGRAMS WHICH WERE BROUGHT TO TAPE WITH THE SAVE-COMMAND ARE RESTORED BY THE COMMAND: LOAD "MTO:NN" (CR).

THESE PROGRAMS CAN BE STARTED BY: RUN (CR).
IN THIS CASE ALL THE PARAMETERS, WHICH HAVE BEEN SAVED ON THE TAPE ARE LOST AND MUST BE REINSERTED BY THE APPROPRIATE COMMANDS.

TO RETAIN ALL THE PREVIOUSLY DEFINED PARAMETERS, THE PROGRAM HAS TO BE RESTARTED BY: RUN15Ø (CR).

LIST OF THE CONSOLE COMMANDS (CC)

AA	ANGLE BETWEEN TWO SETS OF ANGLES
AC	ANGLE CORRECTIONS
AH	ANGLE BETWEEN TWO REFLECTIONS HKL
AV	ANGLE BETWEEN TWO VECTORS
BC	BISECT CURRENT POSITION
BS	CALCULATE BISECTING POSITION
CA	CENTER LIST OF ANGLES
CD	COLLECT DATA
CE	CONTINUE REFINEMENT
CH	READ CHI
CI	CALCULATE INDICES FROM ANGLES
CM	CONTINUE INPUT MAXIMA
CN	CALCULATE NUMBER OF REFLECTIONS
CO	CONTINUE INPUT OF OBSERVATIONS
CP	COLLECT PSI DATA
CQ	CALCULATE Q-SCAN
CR	CENTER REFLECTION
CT	COUNTING TIMES
DA	DELETE ANGLES FROM LIST (INPUT BY IA)
DP	DELETE PEAKS (INPUT BY IM)
DR	DRIVE
DS	DOUBLE STEPSCAN
DV	CALCULATE D-VALUES
EQ	EXECUTE Q-SCAN
EX	EXIT
FC	CLOSE FILE
IA	INPUT ANGLES
IC	INDICES OF CURRENT POSITION
IM	INPUT MAXIMA
IN	INITIATE FILE
IS	INPUT STANDARDS
IX	DETERMINE UNIT CELL
LA	LOAD CURRENT POSITION
LI	ANGLE LIMITS
LL	LIST OF ANGLES (INPUT BY IA)
LP	LIST PEAK COORDINATES
LR	CENTER LIST OF REFLECTIONS
LS	LEAST SQUARES
MA	INPUT MORE ANGLES
MM	MODIFY MATRIX
MR	CENTER MORE REFLECTIONS
NR	NUMBER OF FIRST REFLECTION
OB	OBSERVATIONS FOR LEAST SQUARES
OL	RESTORE OLD MATRIX
OM	READ OMEGA
PA	PROCEED WITH PSI SCAN MEASUREMENT
PC	PRINT CELL CONSTANTS
PD	PROCEED WITH DATA COLLECTION
PH	READ PHI
PI	PRINT INDICES OF PEAKS

PL	PRINT LIST OF VARIABLES
PM	PRINT ORIENTING MATRIX
PP	PRINT POSITION
PQ	PRINT SQUARED MATRIX
PS	PSI SCAN CALCULATION
PR	PRINT RECIPROCAL CELL CONSTANTS
RA	READ ANGLES
RC	READ CELL CONSTANTS
RD	REDUCE DIRECT CELL
RF	REFINE ORIENTING MATRIX
RI	READ INDICES
RM	READ ORIENTING MATRIX
RO	READ ORIENTING REFLECTIONS
RR	READ RECIPROCAL CELL CONSTANTS
RT	READ PARAMETERS FROM TAPE
RW	READ WAVELENGTH
SF	SET FLAGS
SP	STOP
SR	SEARCH REFLECTIONS
SS	MAKE STEPSCAN
ST	STEP TIME
SV	STEP VALUES
TA	TRANSFER ANGLES
TI	INPUT TITLE
TH	READ 2THETA
VO	VOLUME OF CELL
VR	VARIABLE RANGE
WT	WRITE PARAMETERS TO TAPE

DESCRIPTION OF THE CONSOLE COMMANDS (CC)

AA — ANGLE BETWEEN TWO SETS OF ANGLES OF THE "IA"-LIST

PREREQUISITE: IA, RW, LL

INPUT: NUMBER OF THE FIRST-, NUMBER OF THE SECOND ANGLE SET

OUTPUT: ANGLE BETWEEN THE TWO CORRESPONDING LATTICE VECTORS

THIS COMMAND CALCULATES THE ANGLE BETWEEN TWO RECIPROCAL LATTICE VECTORS CORRESPONDING TO TWO ANGLE SETS OF THE LIST PRINTED BY LL.

IT IS POSSIBLE TO CALCULATE MORE THAN ONE VALUE IN SUCCESSION; THE COMMAND IS TERMINATED BY PRESSING ESCAPE.

SEE ALSO AV.

AC — ANGLE CORRECTIONS

INPUT: D(2THETA), D(OMEGA), D(CHI), D(PHI)

IF THE GEOMETRICAL ZEROPOINTS OF THE CIRCLES AND THE ZEROS OF THE DIGITIZERS DO NOT COINCIDE, THE COMMAND AC IS USED TO INPUT TO THE COMPUTER CORRECTION VALUES D(2THETA) . . . D(PHI). THE TRUE POSITIONS OF THE CIRCLES ARE THEN OBTAINED BY SUBTRACTING THE CORRECTION VALUES FROM THE DIGITIZER VALUES.

TO POSITION THE CIRCLES TO CERTAIN VALUES, THE DIGITIZERS ARE POSITIONED TO THE SUM OF THE REQUESTED VALUES AND THE CORRECTION VALUES.

IN OTHER WORDS: THE ANGLE CORRECTIONS D(2THETA) . . . D(PHI) ARE THE VALUES WHICH ONE READS FROM THE DIGITIZERS, IF THE CIRCLES ARE AT THEIR TRUE, GEOMETRICAL ZERO POINTS.

AH — ANGLE BETWEEN TWO REFLECTIONS HKL

PREREQUISITE: RW, IX OR LS OR RM OR RO

INPUT: H, K, L OF THE FIRST REFLECTION
H, K, L OF THE SECOND REFLECTION

OUTPUT: ANGLE BETWEEN THE TWO RECIPROCAL LATTICE VECTORS

THIS COMMAND CALCULATES THE ANGLE BETWEEN TWO RECIPROCAL LATTICE VECTORS REPRESENTED BY THE MILLER INDICES OF TWO REFLECTIONS.

SEE ALSO AA AND AV.

AV ANGLE BETWEEN VECTORS

PREREQUISITE: RW

INPUT: 2THETA, OMEGA, CHI, PHI OF THE FIRST REFLECTION
2THETA, OMEGA, CHI, PHI OF THE SECOND REFLECTION

OUTPUT: ANGLE BETWEEN THE TWO RECIPROCAL LATTICE VECTORS

THIS COMMAND CALCULATES FROM THE REFLECTING ANGLES OF TWO REFLECTIONS THE ANGLE BETWEEN THE CORRESPONDING RECIPROCAL LATTICE VECTORS.

ANGLES WHICH ARE SMALLER THAN TWO DEGREES MAY BE INACCURATE, DUE TO ROUNDING EFFECTS.

IT IS POSSIBLE TO CALCULATE MORE THAN ONE VALUE IN SUCCESSION; THE COMMAND IS TERMINATED BY PRESSING ESCAPE.

SEE ALSO AA AND AH

BC BISECT CURRENT POSITION

PREREQUISITE: RW, IX OR LS OR RM OR RO

OUTPUT: 2THETA, OMEGA, CHI, PHI

THIS COMMAND CALCULATES THE BISECTING POSITION (THETA = OMEGA) CORRESPONDING TO THE MOMENTARY SETTING OF THE DIFFRACTOMETER.

THE CALCULATED POSITION MAY BE SET BY A SUCCEEDING COMMAND DR.

THE WAVELENGTH AND ORIENTING MATRIX NEEDED FOR THIS COMMAND NEED NOT TO BE FROM THE CRYSTAL ACTUALLY ON THE DIFFRACTOMETER (DUMMY VALUES MAY BE USED).

BS CALCULATE BISECTING POSITION

PREREQUISITE: RW, IX OR LS OR RM OR RO

INPUT: 2THETA, OMEGA, CHI, PHI

OUTPUT: 2THETA, OMEGA, CHI, PHI

THIS COMMAND CALCULATES FROM AN ARBITRARY SET OF ANGLES THE CORRESPONDING BISECTING ANGLES (THETA = OMEGA).

THE WAVELENGTH AND ORIENTING MATRIX NEEDED FOR THIS COMMAND NEED NOT TO BE FROM THE CRYSTAL ACTUALLY ON THE DIFFRACTOMETER (DUMMY VALUES MAY BE USED).
THE COMMAND IS TERMINATED BY PRESSING ESCAPE.

THE ANGLES CALCULATED LAST ARE AVAILABLE FOR COMMANDS DR OR SS

CA CENTER ANGLES

PREREQUISITE: ST (OR CT), SV, LI, IA, LL

INPUT: NUMBER OF FIRST, NUMBER OF LAST ANGLE-SET TO BE CENTERED
QUALITY OF 2-THETA, OMEGA, CHI

OUTPUT: FOR EVERY REFLECTION:
2THETA,OMEGA,CHI,PHI
DEVIATION FROM ANGLES
2THETA,OMEGA, CHI
INTENSITY OF CENTER

THIS COMMAND IS USED FOR CENTERING A LIST OF REFLECTIONS INPUT BY IA AND PRINTED BY LL. ONLY THEIR ANGLE POSITION, NOT THEIR H, K, L INDICES HAVE TO BE KNOWN. THE UNCENTERED ANGLES OF THE LIST (INPUT BY IA OR MA) ARE OVERWRITTEN BY THE CENTERED ONES. THE CENTERING ROUTINE IS DONE AS DESCRIBED IN CR.

CD COLLECT DATA

PREREQUISITE: RW, IX OR LS OR RM OR RO, CT, SV, LI, SF, IS, VR, IN*, NR

INPUT:
A) 2THETA (MIN), 2THETA(MAX),
B) START INDICATOR: -2: LIST OF REFLECTIONS
-1: SINGLE REFLECTION
Ø: LOWEST H, K, L
1: GIVE STARTING H, K, L
C) PSI(MIN), PSI(MAX), DELTA PSI
D) IF B = Ø OR 1:

H(MIN), H(MAX)
K(MIN), K(MAX)
L(MIN), L(MAX)

E) IF B = -1:

H, K, L OF THE REFLECTION TO BE MEASURED

F) IF B = -2:

NUMBER OF REFLECTIONS TO BE MEASURED,
H, K, L, OF THE REFLECTIONS TO BE MEASURED,
'IS' IS CLEARED, THEREFORE NO STANDARDS ARE MEASURED

G) IF B = 1:

H, K, L OF THE FIRST REFLECTION

OUTPUT TO CONSOLE:

FIRST LINE:
CURRENT NUMBER, H, K, L, 2THETA, OMEGA, CHI, PHI, PSI, IDENTIFICATION NUMBER (SEE BELOW), NUMBER OF STEPS, STEPWIDTH IN 2THETA, STEPWIDTH IN OMEGA.

SECOND LINE:
SYMBOLIC PROFILE (SEE BELOW).

THIRD LINE:
BACKGROUND 1, INTEGRAL, BACKGROUND 2, NET INTENSITY INET, SIGMA(INET), NORMALIZED INTENSITY INOR, SIGMA(INOR), DATE.

OUTPUT TO MAGTAPE:

LABEL (SEE IN),
DATE
CURRENT NUMBER (SEE NR)
H, K, L,
2THETA, OMEGA, CHI, PHI, PSI
IDENTIFICATION NUMBER
NUMBER OF STEPS,
STEPWIDTH IN 2THETA, STEPWIDTH IN OMEGA,
I(O) = BACKGROUND 1,
MEASURING TIME [1/10 SEC]
I(1)
MEASURING TIME [1/10 SEC]
.
.
.
I(N)
MEASURING TIME [1/10 SEC]
I(N+1) = BACKGROUND 2,
MEASURING TIME [1/10 SEC]
BACKGROUND 1, INTEGRAL, BACKGROUND 2, INET, SIGMA(INET), INOR, SIGMA(INOR).

IDENTIFICATION NUMBER:

Ø:	REFLECTION OUTSIDE OF ANGLE LIMITS (SEE LI)
1:	NORMAL REFLECTION
4:	STANDARD WITHIN 2THETA RANGE
5:	STANDARD OUTSIDE 2THETA RANGE

SYMBOLIC PROFILE:

FOR EACH MEASURING POINT ONE SYMBOL IS PRINTED (SYMBOLS Ø TO 9, A TO T); THE HIGHEST INTENSITY GETS THE HIGHEST SYMBOL T, ALL OTHER POINTS GET A SYMBOL ACCORDING TO THEIR INTENSITY IN RELATION TO THE MAXIMUM.

THE MEASUREMENT BEGINS WITH THE STANDARD REFLECTIONS UNLESS LIST-OF-REFLECTION MEASUREMENT IS DONE.

*IT IS RECOMMENDED TO WRITE THE LAST VERSION OF THE USER PROGRAM INCLUDING ALL PARAMETERS OF THE MEASUREMENT ON THE MAG-TAPE (SEE EX AND SAVE "MTØ:NN") BEFORE INITIALIZING THE MEASUREMENT FILE (IN).

CE CONTINUE REFINEMENT

PREREQUISITE: RF OR OB OR LR

INPUT: SEE RF

IF THERE ARE ALREADY REFLECTIONS INPUT TO THE COMPUTER FOR A LEAST SQUARES REFINEMENT OF THE ORIENTING MATRIX AND ONE WISHES TO USE ADDITIONAL REFLECTIONS OUT OF THOSE WHICH ARE CONTAINED IN THE REFLECTION LIST, THE NUMBERS OF THE REFLECTIONS TO BE ADDED ARE INPUT BY THE COMMAND CE.

FOR DETAILS COMPARE ALSO CO.

CH READ CHI

INPUT: CHI

SEE TH.

CI CALCULATE INDICES FROM ANGLES

PREREQUISITE: RW, IX OR LS OR RM OR RO

INPUT: 2THETA, OMEGA, CHI, PHI

OUTPUT: H, K, L

GIVEN AN ORIENTING MATRIX AND THE SETTING ANGLES OF A REFLECTION, THE COMMAND CI CALCULATES THE MILLER INDICES H K L OF THAT REFLECTION.

IT IS POSSIBLE TO CALCULATE MORE THAN ONE SET OF H K L-VALUES IN SUCCESSION; THE COMMAND IS TERMINATED BY PRESSING ESCAPE.

CM CONTINUE INPUT MAXIMA

PREREQUISITE: IM (OR TA)

INPUT: SEE IM

OUTPUT: SEE IM

THE REFLECTIONS WHICH ARE USED FOR AUTOMATIC INDEXING AND UNIT CELL DETERMINATION (COMMAND IX) ARE OBTAINED BY TA OR IM. IF ONE WISHES TO APPEND MORE REFLECTIONS TO THE ONES GIVEN BY THE ABOVE COMMANDS, ONE USES THE COMMANDS CM OR TA.

TO ESTABLISH THE LIST OF REFLECTIONS FOR INDEXING ONE HAS TO GIVE ONE OF THE COMMANDS IM OR TA. MORE REFLECTIONS (UP TO A MAXIMUM OF 2Ø) ARE APPENDED TO THAT LIST BY ONE OR MORE OF THE COMMANDS CM OR TA.

CN — CALCULATE NUMBER OF REFLECTIONS

INPUT AND PREREQUISITE: SEE CD

OUTPUT: TOTAL NUMBER OF REFLECTIONS TO BE MEASURED BY CD.

CO — CONTINUE INPUT OF OBSERVATIONS

PREREQUISITE: OB (OR RF OR LR)

INPUT: SEE OB

THE SUMMATIONS FOR THE LEAST SQUARES REFINEMENT OF THE ORIENTING MATRIX (COMMAND LS) IS DONE BY THE COMMANDS OB (INPUT OF SINGLE REFLECTIONS), RF (REFLECTIONS SELECTED FROM THE LIST FOR INDEXING) OR LR (LIST OF REFLECTIONS AUTOMATICALLY CENTERED). IF ONE WISHES TO ADD MORE REFLECTIONS TO THE ONES ALREADY USED BY ONE OF THE ABOVE COMMANDS, ONE GIVES THE COMMANDS CO, CE OR MR.

IT IS POSSIBLE TO COMBINE THE DIFFERENT INPUT TYPES E.G.: FIRST USE REFLECTIONS FOUND WITH AUTOMATIC INDEXING (SR, IX), COMMAND RF; THEN APPEND REFLECTIONS WHICH WERE CENTERED SEPARATELY (RI, CR), COMMAND CO; THEN CENTER A LIST OF REFLECTIONS WITH COMMAND MR.

FOR ONE LEAST SQUARES CALCULATION ONE OF THE COMMANDS OB, RF OR LR IS GIVEN FIRST, ADDITIONAL REFLECTIONS ARE APPENDED BY ONE OR MORE OF THE COMMANDS CO, CE OR MR.

ONE POSSIBLE USE OF THE COMMAND CO IS TO CORRECT TYPING ERRORS DURING THE INPUT OF REFLECTIONS WITH OB: IF ONE DETECTS AN ERROR IN THE INPUT OF THE DATA FOR ONE REFLECTION BEFORE THE LAST DATUM (PHI) IS TERMINATED, ONE MAY INTERRUPT OB BY PRESSING ESCAPE, GIVE THE COMMAND CO AND CONTINUE THE INPUT, BEGINNING WITH THE FIRST DATUM (H) OF THE REFLECTION WHERE THE ERROR OCCURRED.

IF THE ERROR IS DETECTED AFTER THE TERMINATION OF ONE REFLECTION THERE IS NO RECOVERY POSSIBLE, INPUT MUST BE RESTARTED AT THE FIRST REFLECTION WITH COMMAND OB.

CP COLLECT PSI-DATA

PREREQUISITE: RW, IX OR LS OR RM OR RO, CT, SV, LI

INPUT:
A) D(PSI)
B) H, K, L OF THE REFLECTION TO BE MEASURED

OUTPUT: H, K, L, 2THETA, OMEGA, CHI, PHI, N x D(PSI), IDENTIFICATION, LEFT BACKGROUND, INTEGRAL INTENSITY, RIGHT BACKGROUND.

STEPSCAN MEASUREMENTS WERE DONE FROM A GIVEN STARTING SET OF ANGLES GIVEN BY H, K, L (BISECTING POSITION) WITH A ROTATION INCREMENT D(PSI) FROM SCAN TO SCAN UP TO A ROTATION OF $36\emptyset^{o}$.

CQ SPECIAL SCAN (Q-SCAN) CALCULATION

PREREQUISITE: RW, IX OR LS OR RM OR RO,

INPUT:
A) NUMBER OF SCANS
B) Ø: BISECTING POSITIONS ARE CALCULATED
1: HIGH RESOLUTION (VECTOR Q IS PLACED IN THE SCATTERING PLANE)

FOR EACH SCAN:

C) STARTING POSITION (H, K, L)
D) D(H, K, L)
E) NUMBER OF STEPS

OUTPUT: CALCULATED H, K, L, 2THETA, OMEGA, CHI, PHI

DUE TO THE INPUT H, K, L and D(H, K, L) SETS OF ANGLES ARE CALCULATED FOR INDIVIDUAL H, K, L STEPS WITH FIXED CHI AND PHI ANGLES IF B = 1.

CR CENTER REFLECTION

PREREQUISITE: ST (OR CT), SV, LI

INPUT: QUALITY OF 2THETA, OMEGA, CHI

OUTPUT:
2THETA, OMEGA, CHI, PHI
DEVIATION FROM ANGLES 2THETA, OMEGA, CHI
INTENSITY OF CENTER

THIS COMMAND IS USED FOR THE DETERMINATION OF THE CENTER OF A REFLECTION. THE DIFFRACTOMETER MUST BE POSITIONED TO A POINT, WHERE SOME INTENSITY FROM A REFLECTION REACHES THE COUNTER.

THE CENTERING IS DONE IN THE FOLLOWING WAY:

A STEPSCAN WITH A STEPNUMBER AND STEPWIDTH FOR OMEGA, BOTH GIVEN BY SV, IS MADE. (ALL OTHER CIRCLES NOT STEPPED). THE CENTER OF GRAVITY OF THE SCANNED REFLECTION IS DETERMINED AND ASSUMED AS THE CENTER OF OMEGA.

NEXT A STEPSCAN IS MADE WITH THE 2THETA CIRCLE, ALL OTHER CIRCLES STATIONARY, THE CENTER OF GRAVITY THIS TIME GIVES THE CENTER OF 2THETA.

IN THE SAME WAY THE CENTER OF CHI IS DETERMINED.

THE WHOLE PROCEDURE IS PERFORMED UP TO FOUR TIMES.

FOR A NEW CYCLE, THE STEPNUMBERS FOR THE 2THETA, OMEGA AND CHI STEPSCAN ARE REDUCED INDIVIDUALLY BY THE NUMBER OF STEPS, WHOSE INTENSITY WERE SMALLER THAN THE INTENSITY OF THE FIRST STEP. CARE IS TAKEN TO THE POSSIBILITY THAT THE REFLECTION IS NOT COMPLETELY WITHIN THE SCAN-RANGE!

IF THE DEVIATIONS OF 2THETA, OMEGA AND CHI FROM ONE CYCLE TO THE NEXT ARE SMALLER THAN THE VALUES GIVEN IN THE INPUT, THE CENTERING IS STOPPED.

FOR EACH CYCLE THE ANGLES AND THE ANGLE DIFFERENCES TO THE CYCLE BEFORE ARE PRINTED. THE INTENSITY OF THE CENTER IS MEASURED AND ALSO PRINTED.

THE MEASURING TIME AT EACH STEP IS GIVEN BY ST OR CT (SEE ALSO COMMANDS CT AND ST).

CT — COUNTING TIMES

INPUT: TB (BACKGROUND TIME)
TS (STEP TIME)

DURING AUTOMATIC DATA COLLECTION BACKGROUND IS MEASURED ACCORDING TO TB ON EACH SIDE OF A REFLECTION. EVERY STEP DURING THE REFLECTION SCAN IS MEASURED ACCORDING TO TS. (SEE ALSO COMMAND SV.)

TS IS ALSO USED FOR COMMAND SS AND FOR REFLECTION CENTERING (E.G. COMMANDS CR, LR); SEARCHING OF REFLECTIONS (SR, FR) IS DONE WITH A TIME TB AT EACH MEASURING POINT.

BACKGROUND TIME = SCALED MONITOR RATE
STEP TIME = SCALED MONITOR RATE

DA DELETE ANGLES

PREREQUISITE: IA OR MA, LL

INPUT: NUMBERS OF ANGLE SETS TO BE DELETED

THE COMMAND IA BUILDS UP A LIST OF ANGLES WHICH ARE USED AS STARTING SETS BY THE CENTERING ROUTINE CA. TO REMOVE ANGLE SETS FROM THIS LIST, THE COMMAND DA IS USED.

ONCE A ANGLE SET IS REMOVED FROM THE LIST, ALL SETS WITH HIGHER NUMBERS HAVE THIS NUMBER DECREASED BY ONE; THEREFORE IT IS RECOMMENDED TO START DELETION AT THE HIGHEST NUMBERED SET.

DP DELETE PEAKS

PREREQUISITE: TA OR IM

INPUT: NUMBERS OF REFLECTIONS TO BE DELETED

THE COMMANDS TA OR IM BUILD UP A LIST OF RECIPROCAL LATTICE POINTS WHICH IS USED BY IX TO DETERMINE A PRIMITIVE UNIT CELL. TO REMOVE REFLECTIONS FROM THIS LIST, THE COMMAND DP IS USED. (REFLECTIONS TO BE DELETED MAY BE SUCH WHERE TYPING ERRORS WERE MADE DURING INPUT WITH COMMAND IM, OR REFLECTIONS BELONGING TO SATELLITE CRYSTALS ETC.)

ONCE A REFLECTION IS REMOVED FROM THE LIST, ALL REFLECTIONS WITH HIGHER REFLECTION NUMBERS HAVE THIS NUMBER DECREASED BY ONE; TO REMOVE MORE THAN ONE REFLECTION FROM THE LIST IT IS THEREFORE RECOMMENDED TO START DELETION AT THE HIGHEST NUMBERED REFLECTION.

IF REFLECTIONS ARE REMOVED FROM THE LIST, NEW REFLECTIONS MAY BE APPENDED TO IT BY USING THE COMMANDS TA OR CM. (UP TO A MAXIMUM OF 2Ø.)

DR DRIVE

PREREQUISITE: ANY COMMAND WHICH SETS UP A SET OF ANGLES (E.G. RA OR RI . . .), LI

POSITIONS THE DIFFRACTOMETER TO THE ANGLES LAST INPUT OR CALCULATED.

--

DS DOUBLE STEPSCAN

--

PREREQUISITE: ST (OR CT), SV, RA (OR EQUIV.), LI

OUTPUT: FOR POSITIVE AND NEGATIVE 2THETA, OMEGA
SEE SS

THE FIRST PART OF THIS COMMAND IS EXACTLY THE SAME AS SS, BUT AFTER THE END OF THE SCAN A SECOND SCAN IS MADE WITH 2THETA AND OMEGA SET TO NEGATIVE VALUES.
THE DIFFERENCE OF THE OMEGA VALUES OF THE PEAKS OBTAINED IN BOTH SCANS GIVES A VALUE FOR 2THETA WHICH SHOULD BE FREE OF ZERO POINT ERRORS OF THE CIRCLES AND MAY BE USED FOR THE DETERMINATION OF VERY ACCURATE LATTICE CONSTANTS.

--

DV CALCULATE D-VALUES

--

PREREQUISITE: RW

INPUT: THETA, N

OUTPUT: D^*, D

CALCULATES FROM THE ANGLE THETA AND THE ORDER N OF A REFLECTION THE LAYER LINE DISTANCE D AND ITS RECIPROCAL D^* ACCORDING TO BRAGGS LAW:

$$D^* = \mathrm{SIN}(\mathrm{THETA}) / (N \cdot \mathrm{LAMBDA}/2)$$

IT IS POSSIBLE TO CALCULATE MORE THAN ONE VALUE IN SUCCESSION; THE COMMAND IS INTERRUPTED BY PRESSING ESCAPE.

--

EQ Q-SCAN MEASUREMENT (SEE CQ)

--

PREREQUISITE: SEE CQ + (CT,LI)

INPUT:
A) INDICATOR: Ø : NO BACKGROUND MEASUREMENT
1 : BACKGROUND MEASUREMENT
IF 1 : DELTA-OMEGA
B) NUMBER OF SCANS
C) Ø: BISECTING POSITIONS ARE CALCULATED
1: HIGH RESOLUTION (VECTOR Q IS PLACED IN THE SCATTERING PLANE)

FOR EACH SCANS:

D) STARTING POSITION (H, K, L)
E) D(H, K, L)
F) NUMBER OF STEPS

OUTPUT:
DATE
H, K, L, 2THETA, OMEGA, CHI, PHI, INTENSITY, BACKGROUND
PROFILE (SEE SS)

--

EX EXIT

--

THIS COMMAND GIVES THE PROGRAM CONTROL BACK TO THE BASIC SYSTEM.

--

FC CLOSE FILE

--

PREREQUISITE: IN

IF THE OUTPUT OF THE COMMAND CD WAS DIRECTED TO A FILE, THIS FILE MUST BE CLOSED AFTER THE END OF THE MEASUREMENT WITH THE COMMAND FC.

--

IA INPUT ANGLES

--

PREREQUISITE: --

INPUT: 2THETA(1),OMEGA(1),CHI(1),PHI(1)
.
.
.
2THETA(N), OMEGA(N),CHI(N),PHI(N)

UP TO 6Ø ANGLE SETS MAY BE INPUT FOR LATER CENTERING WITH CA. THE COMMAND IS TERMINATED BY PRESSING ESCAPE: AN OLD LIST OF ANGLE SETS IS CLEARED BY IA. MORE ANGLES CAN BE INPUT BY MA. ANGLES OF THIS LIST CAN BE TRANSFERRED TO THE IM-REFLECTION LIST VIA TA.

--

IC INDICES OF CURRENT POSITION

--

PREREQUISITE: RW, IX OR LS OR RM OR RO

OUTPUT: H, K, L

GIVEN AN ORIENTING MATRIX, THIS COMMAND CALCULATES THE H K L-VALUE OF THE RECIPROCAL LATTICE POINT WHICH IS JUST IN REFLECTION POSITION.

IM INPUT MAXIMA

PREREQUISITE: RW

INPUT: 2THETA, OMEGA, CHI, PHI
OF UP TO 2Ø CENTERED REFLECTIONS

OUTPUT: FOR EACH OF THE REFLECTIONS:
NUMBER, X, Y, Z (ORTHOGONAL COORDINATES)

UP TO 2Ø REFLECTIONS MAY BE USED FOR THE AUTOMATIC DETERMINATION OF THE UNIT CELL. THESE REFLECTIONS ARE INPUT BY THE COMMAND IM OR TRANSFERRED BY THE COMMAND TA. A SUBSEQUENT COMMAND IX FINDS A PRIMITIVE CELL FROM THESE LATTICE POINTS.

IN INITIATE FILE OUTPUT

INPUT: FILENAME,
TITLE,
LABEL

IF THE REFLECTION DATA ARE TO BE OUTPUT NOT ONLY TO THE OPERATOR'S CONSOLE, BUT TO A FILE (E.G. ON DISK OR MAG-TAPE OR HIGH SPEED PUNCH), THE COMMAND CD MUST BE PRECEDED BY THE COMMAND IN.

THIS COMMAND HAS THE FOLLOWING FUNCTION:

IT READS IN THE NAME OF THE FILE (E.G.: DATFIL, MTØ: NN, SPTP IF THE FILE IS TO BE GENERATED ON DISK, ON MAG-TAPE OR ON THE HIGH SPEED PUNCH RESP.). FILENAME MUST BE NO LONGER THAN SIX CHARACTERS.

TITLE IS A STRING OF UP TO 72 CHARACTERS WHICH FORMS THE FIRST RECORD OF THE FILE.

LABEL IS AN IDENTIFICATION (UP TO 4 CHARACTERS), WHICH IS OUTPUT WITH EVERY REFLECTION.

THE COMMAND IN OPENS THE OUTPUT FILE AND WRITES THE TITLE LINE.

AFTER THE END OF THE DATA COLLECTION THE FILE HAS TO BE CLOSED BY FC.

IS INPUT STANDARDS

INPUT: N (NUMBER OF STANDARDS),
IF N >< Ø:
F (FREQUENCY),
H, K, L OF FIRST STANDARD,
.
.
.
H, K, L OF LAST STANDARD,

UP TO 1Ø STANDARD REFLECTIONS MAY BE USED. THESE CONTROL REFLECTIONS ARE MEASURED AT THE BEGINNING OF THE AUTOMATIC DATA COLLECTION AND THEN ALWAYS AFTER F NORMAL REFLECTIONS. THE STANDARDS ARE MEASURED WITH THE SAME PROCEDURE AS THE NORMAL REFLECTIONS UNLESS PSI-SCAN MEASUREMENT IS REQUIRED. ON OUTPUT, STANDARD REFLECTIONS HAVE AN IDENTIFICATION NUMBER OF 4 OR 5 (SEE COMMAND CD).

N = Ø MEANS NO STANDARD REFLECTIONS.

IX DETERMINE UNIT CELL

PREREQUISITE: TA OR IM

OUTPUT: A1, A2, NA (SEE BELOW),
B1, B2, NB,
C1, C2, NC

THE COMMAND IX DETERMINES A PRIMITIVE UNIT CELL IN THE FOLLOWING WAY:

FROM THE LIST OF COORDINATES, BUILD UP BY IM OR TA, IT SEARCHES THE TWO POINTS, WHICH HAVE THE SHORTEST DISTANCE BETWEEN THEM (POINTS NUMBER A1 AND A2 ON OUTPUT). IT SEARCHES THEN, IF APPROXIMATELY THE SAME DISTANCE (SAME LENGTH AND SAME DIRECTION) OCCURS BETWEEN OTHER POINTS (TOTAL NUMBER OF OCCURENCE NA). THE MEAN OF ALL THE NA DIFFERENCE VECTORS IS TAKEN AS THE RECIPROCAL AXIS A* AND THE COMPONENTS OF A* ALONG THE COORDINATE AXES A*(X), A*(Y), A*(Z) ARE THE FIRST COLUMN OF THE ORIENTING MATRIX.

THEN THE NEXT SHORTEST DISTANCE NOT IN THE SAME DIRECTION AS A* IS SEARCHED (FOUND BETWEEN POINTS B1 AND B2), THE MEAN OF THE NB IDENTICAL VECTORS IS TAKEN AS B* AND THE COMPONENTS OF B* ARE THE SECOND COLUMN OF THE ORIENTING MATRIX.

IN THE SAME WAY, THE C*-AXIS IS TAKEN FROM THE SHORTEST DIFFERENCE VECTOR NOT COPLANAR TO A* B* (FOUND BETWEEN C1 AND C2, TOTAL NC TIMES), ITS COMPONENTS FROM THE THIRD COLUMN OF THE ORIENTING MATRIX.

THE CELL FOUND BY IX IS IN EVERY CASE A PRIMITIVE ONE. TO GET THE TRUE CRYSTALLOGRAPHIC CELL, IT MAY BE NECESSARY TO TRANSFORM THIS CELL. THIS CAN BE DONE WITH THE COMMAND MMOR RD.

LA LOAD POSITION

TRANSFERS THE CURRENT ANGLES TO THE REQUESTED ANGLES REGISTER. HAS THE SAME EFFECT AS IF ONE GIVES THE COMMAND RA WITH THE CURRENT DIFFRACTOMETER ANGLES. MAY BE USED FOR EXAMPLE TO MAKE A STEPSCAN (SS) AT THE CURRENT POSITION.

LI ANGLE LIMITS

INPUT: OMEGA (MIN)
OMEGA (MAX)
CHI (MIN)
CHI (MAX)
PHI (MIN)
PHI (MAX)

BEFORE A REFLECTION IS MEASURED, THE CALCULATED SETTING ANGLES FOR THAT REFLECTION ARE COMPARED AGAINST THE VALUES GIVEN BY LI. IF AN ANGLE IS OUTSIDE THE LIMIT, THE REFLECTION GETS AN IDENTIFICATION NUMBER OF Ø (SEE CD) AND IS NOT MEASURED.

LL PRINT LIST OF ANGLES

PREREQUISITE: IA OR MA

OUTPUT: NUMBER, 2THETA, OMEGA, CHI, PHI
OF ALL ANGLE SETS

THE ANGLES FOR AUTOMATIC CENTERING BY CA ARE INPUT BY ONE OR MORE OF THE COMMANDS IA AND MA. THE CORRESPONDING ANGLES ARE REPLACED BY THE CENTERED ONES. THE COMMAND TA MAY BE USED FOR TRANSFERRING CERTAIN ANGLE SETS TO THE IM LIST FOR LATER REFINING OF THE ORIENTING MATRIX. WITH THE COMMAND AA THE ANGLE BETWEEN TWO ANGLE SETS OF THIS LIST IS CALCULATED.

LP LIST PEAK COORDINATES

PREREQUISITE: TA OR IM OR LR

OUTPUT: NUMBER, X, Y, Z (ORTHOGONAL COORDINATES)
OF ALL REFLECTIONS FOR INDEXING

THE REFLECTIONS FOR AUTOMATIC UNIT CELL DETERMINATION ARE OBTAINED BY ONE OR MORE OF THE COMMANDS IM, CM AND TA.
THE COMMAND LP IS USED TO PRINT A CONTINUOUS LIST OF ALL THOSE REFLECTIONS AT THE CONSOLE.

LR CENTER LIST OF REFLECTIONS

PREREQUISITE: ST, SV, RW, (IX OR LS OR RM OR RO), LI

INPUT: QUALITY OF 2THETA, OMEGA, CHI
NUMBER OF REFLECTIONS,
H, K, L OF FIRST REFLECTION
.
.
.
H, K, L OF LAST REFLECTION

OUTPUT: FOR EVERY REFLECTION:
H, K, L, 2THETA, OMEGA, CHI, PHI,
DEVIATION FROM STARTING ANGLES IN 2THETA, OMEGA, CHI, INTENSITY AT CENTER

THE COMMAND LR IS USED TO IMPROVE THE ORIENTING MATRIX BY CENTERING A NUMBER OF REFLECTIONS.

SETTING ANGLES OF THE LISTED REFLECTIONS ARE TAKEN FROM THE PRESENT ORIENTING MATRIX, AT THE CALCULATED POSITIONS THE CENTERING OF THE REFLECTIONS IS CARRIED OUT AS DESCRIBED UNDER COMMAND CR. THE CENTERED REFLECTIONS ARE SUMMED UP FOR A SUCCEEDING COMMAND LS.

THE NUMBER OF REFLECTIONS, WHICH CAN BE CENTERED WITH ONE COMMAND LR IS LIMITED TO 2Ø; IF MORE REFLECTIONS ARE TO BE USED, THESE CAN BE INTRODUCED BY COMMAND MR.

THE ORTHOGONAL COORDINATES OF THE CENTERED POSITIONS ARE SAVED IN THE LIST WHICH COULD BE PRINTED BY LP OR PI. IF THERE IS ANY SPACE LEFT IN THE IA-LIST, THE CENTERED ANGLES ARE APPENDED TO THIS LIST.

LS LEAST SQUARES

PREREQUISITE: OB OR LR OR RF

THE COMMAND LS CALCULATES THE ORIENTING MATRIX FROM THE REFLECTIONS GIVEN BY THE COMMANDS OB, LR OR RF (AND POSSIBLY CO, CE, MR).

IF THE AXES OF THE CRYSTAL FORM A LEFTHANDED COORDINATE SYSTEM, THE VOLUME OF THE ELEMENTARY CELL WILL BE NEGATIVE! (SEE VO.)

MA INPUT MORE ANGLES

PREREQUISITE: IA OR LR OR MR

INPUT: SEE IA

THE ANGLES INPUT BY MA ARE APPENDED TO THOSE GIVEN BY IA.
THE COMMAND IS TERMINATED BY PRESSING ESCAPE.

MM MODIFY MATRIX

PREREQUISITE: RM OR RO OR IX OR LS

INPUT: MODIFICATION MATRIX M

OUTPUT: VOLUME OF MODIFIED CELL
RETRANSFORMATION MATRIX

THE ORIENTING MATRIX O IS REPLACED BY O*(TRANSPOSE OF M).

THIS COMMAND IS USED TO CHANGE THE AXES OF THE ELEMENTARY CELL: THE ROWS OF THE MATRIX M DETERMINE, HOW THE OLD RECIPROCAL AXES ARE TRANSFORMED TO GIVE THE NEW ONES.

THE OLD MATRIX O IS SAVED AND MAY BE RECALLED BY OL!

IN ADDITION THE INVERSE MODIFYING MATRIX IS PRINTED FOR LATER RETRANSFORMATION OF THE ORIENTING MATRIX.

MR CENTER MORE REFLECTIONS

PREREQUISITE: LR (OR OB OR RF)

INPUT: SEE LR

OUTPUT: SEE LR

THIS COMMAND IS QUITE SIMILAR TO LR; THE ONLY DIFFERENCE IS, THAT THE REFLECTIONS USED BY MR ARE APPENDED TO OTHERS, WHICH MAY HAVE BEEN GIVEN BY LR, OB OR RF, WHEREAS LR STARTS A NEW SUMMATION FOR LS.

UP TO 2Ø REFLECTIONS MAY BE GIVEN WITH EACH MR.

COMPARE ALSO CO.

NR NUMBER OF FIRST REFLECTIONS

INPUT: NR

THE DATA COLLECTING PROGRAM (COMMAND CD) KEEPS A NUMBER NR WHICH IS INCREMENTED BY 1 FOR EACH MEASURED REFLECTION. THIS NUMBER CAN BE PRESENT TO ANY VALUE BY THE COMMAND NR.

OB OBSERVATIONS FOR LEAST SQUARES

PREREQUISITE: RW

INPUT: H, K, L, 2THETA, OMEGA, CHI, PHI
FOR AT LEAST THREE NON COPLANAR
REFLECTIONS

THIS COMMAND CALCULATES ORTHOGONAL COORDINATES OF THE OBSERVED REFLECTIONS AND PERFORMS THE SUMMATIONS FOR A SUBSEQUENT COMMAND LS.

THERE IS NO LIMITATION ON THE NUMBER OF REFLECTIONS.

SEE ALSO: CO.

OL RESTORE OLD MATRIX

WHENEVER A NEW ORIENTING MATRIX IS OBTAINED (BY RM OR RO OR IX OR LS OR MM), THE OLD MATRIX IS SAVED. IF IT TURNS OUT, THAT THE OLD MATRIX SHOULD BE USED AGAIN, THIS MATRIX CAN BE REINSTALLED BY ISSUING THE COMMAND OL.

OM READ OMEGA

INPUT: OMEGA

SEE TH.

PA PROCEED WITH COLLECTING PSI-DATA

PREREQUISITE: CP

INPUT: H, K, L

OUTPUT: SEE CP

PC PRINT CELL CONSTANTS

PREREQUISITE: IX OR LS OR RM OR RO

OUTPUT: A, B, C ALPHA, BETA, GAMMA

CALCULATES THE LATTICE CONSTANTS FROM THE ORIENTING MATRIX AND PRINTS THEM ON THE CONSOLE PRINTER.

PD PROCEED WITH DATA COLLECTION

PREREQUISITE: CD

INPUT: H, K, L OF THE FIRST REFLECTION

OUTPUT: SEE CD

IF THE AUTOMATIC DATA COLLECTION (CD) WAS INTERRUPTED, IT CAN BE RESUMED AT A SELECTABLE REFLECTION BY GIVING THE COMMAND PD.

THE MEASUREMENT STARTS AT THE INPUT REFLECTION, ALL THE MEASURING PARAMETERS REMAIN AT THE VALUES GIVEN FOR CD.

PH READ PHI

INPUT: PHI

SEE TH.

PI PRINT INDICES OF PEAKS

PREREQUISITE: (TA OR IM OR LR) AND (IX OR LS OR RO OR RM)

OUTPUT: FOR EVERY REFLECTION OF THE COORDINATE LIST:
NUMBER, X, Y, Z, H, K, L

THIS COMMAND IS MAINLY INTENDED TO CHECK, WHETHER ALL REFLECTIONS OF THE COORDINATE LIST (BUILD BY TA OR IM) CAN BE INDEXED ON THE BASIS OF THE CELL FOUND BY IX, OR WHETHER THERE ARE POINTS WHICH DO NOT GIVE INTEGER H K L -VALUES.

IF THERE ARE DEVIATIONS FROM INTEGER H K L, ONE HAS TO CHECK, WHETHER THESE ARE CAUSED BY INPUT ERRORS - THESE REFLECTIONS MAY BE DELETED BY DP - OR WHETHER THEY BELONG TO REAL REFLECTIONS. THEN EITHER THE ELEMENTARY CELL MUST BE CHANGED OR THE CRYSTAL UNDER INVESTIGATION IS NOT A SINGLE CRYSTAL (TWINNED, SPLIT?).

WHEN THE FINAL ORIENTATION OF THE CRYSTAL IS FOUND, THE COMMAND PI MAY BE USED TO CHECK, WHETHER THERE ARE SYMMETRICALLY EQUIVALENT REFLECTIONS IN THE COORDINATE LIST. THESE REFLECTIONS SHOULD HAVE APPROXIMATELY THE SAME INTENSITY AT THEIR MAXIMA.

--
PL PRINT LIST
--

THERE WILL BE A LISTING OF THE EXPERIMENTAL PARAMETERS, E.G.

```
TITLE              TI     TITLE  TITLE  TITLE   TITLE   TITLE   TITLE
DATE               31.5.  16H36M17S
WAVELENGTH         RW      1.ϕ21ϕ
ANGLE CORRECT.     AC     -ϕ.54ϕϕ      -ϕ.32ϕϕ     ϕ.1ϕϕϕ     ϕ.ϕϕϕϕ
ANGLE LIMITS       LI        ϕ     5ϕ     -9ϕ      9ϕ     -18ϕ     18ϕ
ORIENT. MATRIX     PM
 -ϕ.ϕ44158 -ϕ.ϕ7ϕ433  -ϕ.125587
 -ϕ.ϕ8ϕ629 -ϕ.ϕ94678   ϕ.ϕ6683ϕ
 -ϕ.ϕ98249  ϕ.1ϕ94ϕ5  -ϕ.ϕ23ϕ98
PRINT CELL CON.    PC
    7.4919    6.2144      6.9987    9ϕ.ϕ27    97.241    89.984
COUNT. TIME        CT        1.8ϕϕϕ     1.8ϕϕϕ
STEP VALUES        SV
    NUMBER OF STEPS          29
    STEPWIDTH               ϕ.ϕϕϕϕ     ϕ.ϕ6ϕϕ     ϕ.ϕϕϕϕ     ϕ.ϕϕϕϕ
VARIABLE RANGE     VR        4.ϕϕϕϕ    -8.4ϕϕϕ     9.7ϕϕϕ
INPUT STANDARDS IS
    NUMBER OF STANDARDS          1
    FREQUENCY                   5ϕ
    STANDARDREFLEXE            3        ϕ       -5
SET FLAGS          SF           ϕ        1       ϕ      2        1
DATA-FILE, LAB     IN           MTO:9          TEST
CURRENT NUMBER     NR           1
```

--
PM PRINT ORIENTING MATRIX
--

PREREQUISITE: IX OR LS OR RM OR RO

OUTPUT: ORIENTING MATRIX O

THIS COMMAND PRINTS THE ORIENTING MATRIX, WHICH MAY BE OF LATER USE FOR ABSORPTION CORRECTIONS ETC.

--
PP PRINT POSITION
--

OUTPUT: 2THETA, OMEGA, CHI, PHI

PRINTS THE CURRENT SETTING ANGLES OF THE DIFFRACTOMETER AT THE CONSOLE.

PQ PRINT SQUARED MATRIX

PREREQUISITE: IX OR LS OR RM OR RO

OUTPUT: Q = O´*O
(O´: TRANSPOSE OF ORIENTING MATRIX O)

THIS MATRIX Q IS SYMMETRIC AND INDEPENDENT OF THE ORIENTATION OF THE CRYSTAL. ITS ELEMENTS ARE THE SCALAR PRODUCTS OF THE RECIPROCAL AXES. FROM THIS MATRIX ONE CAN DERIVE THE SYMMETRY OF THE CRYSTAL.

PR PRINT RECIPROCAL CELL CONSTANTS

PREREQUISITE: IX OR LS OR RM OR RO

OUTPUT: A*, B*, C* ALPHA*, BETA*, GAMMA*

CALCULATES THE RECIPROCAL LATTICE CONSTANTS FROM THE ORIENTING MATRIX AND PRINTS THEM ON THE CONSOLE PRINTER.

PS PSI SCAN CALCULATION

PREREQUISITE: RA OR RI

INPUT: D(PSI)

FROM A GIVEN SET OF ANGLES PS CALCULATES A NEW SET OF TRANSFORMED BY A PSI-ROTATION OF D(PSI).

RA READ ANGLES

INPUT: 2THETA, OMEGA, CHI, PHI

USED TO INPUT A SET OF ANGLES; A LATER COMMAND DR POSITIONS THE DIFFRACTOMETER TO THE REQUESTED ANGLES.

RC READ CELL CONSTANTS

INPUT: A, B, C, ALPHA, BETA, GAMMA

SEE: RO.

RD REDUCE DIRECT CELL

PREREQUISITE: RW, IX OR LS OR RM OR RO

OUTPUT: CELL CONSTANTS OF EVERY REDUCTION STEP

IF ONE HAS FOUND AN ORIENTING MATRIX BY IX OR OWN INDEXING, THE CORRESPONDING DIRECT CELL MAY BE NOT A REDUCED ONE. THIS COMMAND REDUCES A GIVEN CELL BY MEANS OF THE BUERGER ALGORITHM. ATTENTION: RD ALWAYS YIELDS A PRIMITIVE CELL.

THE OLD ORIENTING MATRIX IS SAVED AND MAY BE REINSTALLED BY OL.

RF REFINE ORIENTING MATRIX

PREREQUISITE: (IM OR CM OR TA) AND (IX OR LS OR RO OR RM)

INPUT: NUMBERS OF REFLECTIONS TO BE USED FOR LEAST SQUARES

THE ORIENTING MATRIX FOUND BY THE COMMAND IX IS NOT VERY ACCURATE BECAUSE ONLY THE SHORTEST DISTANCES BETWEEN LATTICE POINTS ARE USED TO BUILD IT. A BETTER MATRIX IS NORMALLY OBTAINED, IF ONE USES ALL THE REFLECTIONS OF THE IM-LIST WHICH CAN BE INDEXED UNAMBIGUOUSLY FOR A LEAST SQUARES REFINEMENT OF THE ORIENTING MATRIX.

THE NUMBERS OF THE REFLECTIONS TO BE USED WITH THIS REFINEMENT ARE INPUT BY RF.

SEE ALSO: CO.

RI READ INDICES, CALCULATE ANGLES

PREREQUISITE: RW, IX OR LS OR RM OR RO

INPUT: H, K, L

OUTPUT: 2THETA, OMEGA, CHI, PHI

CALCULATES FROM THE MILLER INDICES H K L AND THE ORIENTING MATRIX THE SETTING ANGLES OF THE REFLECTION IN SYMMETRIC (BISECTING) POSITION. (THETA = OMEGA)

H K L - VALUES MAY BE NON INTEGER.

IT IS POSSIBLE TO CALCULATE MORE THAN ONE SET OF ANGLES IN SUCCESSION; THE COMMAND IS TERMINATED BY PRESSING ESCAPE.

THE ANGLES CALCULATED LAST ARE AVAILABLE FOR COMMANDS DR OR SS ETC.

RM READ ORIENTING MATRIX

INPUT: ORIENTING MATRIX O

IF THE ORIENTING MATRIX O OF THE CRYSTAL UNDER INVESTIGATION IS ALREADY KNOWN (E.G. FROM A PREVIOUS MEASUREMENT), IT MAY BE INPUT BY THE COMMAND RM.

RO READ ORIENTING REFLECTIONS

PREREQUISITE: RW, RC OR RR

INPUT: H, K, L, OMEGA, CHI, PHI
OF THE FIRST ORIENTING REFLECTION,
H, K, L, OMEGA, CHI, PHI
OF THE SECOND ORIENTING REFLECTION

IF THE LATTICE CONSTANTS AND THE SETTING ANGLES OF TWO REFLECTIONS ARE KNOWN, RO DETERMINES THE ORIENTING MATRIX WHICH CAN THEN BE USED TO CALCULATE THE SETTING ANGLES OF OTHER REFLECTIONS.

IF LATTICE CONSTANTS ARE KNOWN, THEY ARE INPUT BY RC; IF RECIPROCAL CONSTANTS ARE KNOWN, THEY ARE INPUT BY RR BEFORE RO CAN BE GIVEN.

RR READ RECIPROCAL CELL CONSTANTS

INPUT: A*, B*, C*, ALPHA*, BETA*, GAMMA*

SEE: RO.

RT READ PARAMETERS FROM TAPE

PREREQUISITE: PARAMETERS HAVE TO BE WRITTEN ON TAPE WITH THE COMMAND WT AT ANY TIME.

INPUT: FILE-NAME IN THE FORM: MTO:NN

PARAMETERS PREVIOUSLY WRITTEN ON FILE BY WT CAN BE REINSTALLED BY THIS COMMAND.

PURPOSE: THE PROGRAM CAN BE STARTED BY RUN(CR) AND THE PARAMETERS GIVEN BY RM, CT, SV, SF, LI, TI, RW, VR, NR , IS and (IM OR TA OR LR OR MR) ARE READ FROM TAPE.

RW READ WAVELENGTH

INPUT: LAMBDA

THIS COMMAND IS USED TO INPUT TO THE COMPUTER THE WAVELENGTH LAMBDA, WITH WHICH THE MEASUREMENT OF THE REFLECTIONS IS TO BE MADE.

SF SET FLAGS

INPUT:

A) 2THETA:OMEGA RATIO:
- Ø: OMEGA-SCAN
- 1: 2THETA:OMEGA = 1
- 2: 2THETA:OMEGA = 2

B) Ø: CONSTANT OMEGA RANGE FOR ALL REFLECTIONS
- 1: VARIABLE OMEGA RANGE

C) Ø: P - LATTICE
- 1: A
- 2: B
- 3: C
- 4: F
- 5: I
- 6: R - LATTICE ON HEX. AXES (-H+K+L=3N)

D) 1: H IS SLOWEST CHANGING INDEX
- 2: K
- 3: L

E) Ø: NO MAG-TAPE OUTPUT
- 1: MAG-TAPE OUTPUT
- 2: NO MAG-TAPE OUTPUT BUT PROFILE (LIKE SS)
- 3: MAG-TAPE OUTPUT + PROFILE

THE COMMAND SF SETS CERTAIN SWITCHES WHICH DETERMINE THE PROCEDURE OF THE AUTOMATIC DATA COLLECTION (COMMAND CD):

A) SELECTS THE 2THETA:OMEGA SCAN RATIO; THE VALUE GIVEN HERE IS ONLY USED, IF THE MEASUREMENT IS TO BE MADE WITH VARIABLE OMEGA RANGE (FLAG B = 1); OTHERWISE THE RATIO IS DETERMINED BY THE 2THETA AND OMEGA STEPWIDTH GIVEN BY COMMAND SV. THE SCAN RATIO MAY BE NON INTEGER.

B) DETERMINES WHETHER ALL REFLECTIONS ARE MEASURED WITH THE SAME OMEGA RANGE OR WHETHER THE OMEGA RANGE FOR A REFLECTION SHOULD BE DEPENDENT ON 2THETA. (COMPARE VR FOR DETAILS.)

C) SELECTS EXTINCTION LAWS FOR CENTERED LATTICES.

D) SELECTS THE SEQUENCE IN WHICH THE REFLECTIONS ARE MEASURED: THE MOST RAPIDLY CHANGING INDEX IS THE ONE FOLLOWING THE SLOWEST ONE. (H FOLLOWS L!)

E) MAG-TAPE OUTPUT MAY BE SUPPRESSED BY THIS FLAG.

SP STOP

AN EXECUTING COMMAND CAN BE INTERRUPTED BY PRESSING ESCAPE AT THE CONSOLE. IF THIS INTERRUPT IS GIVEN DURING AN OPERATION OF THE DIFFRACTOMETER, THE OPERATION IS NOT REALLY CANCELLED, IT IS ONLY SUSPENDED. TO CANCEL THE OPERATION AND TO BRING THE DIFFRACTOMETER INTERFACE TO A DEFINED STARTING POINT, ONE HAS TO GIVE THE COMMAND SP.

SR SEARCH REFLECTIONS

PREREQUISITE: CT, LI

INPUT: 2THETA(MIN), 2THETA(MAX), D(2THETA),
CHI(MIN), CHI(MAX), D(CHI),
PHI(MIN), PHI(MAX), D(PHI)

OUTPUT: LIST OF
2THETA, OMEGA, CHI, PHI, INTENSITIES

THIS COMMAND SCANS A SELECTED REGION OF THE RECIPROCAL LATTICE AND PRINTS THE SETTING ANGLES OF ALL THE POINTS, WHERE IT FINDS AN INTENSITY, WHICH IS SIGNIFICANTLY HIGHER THAN THE NORMAL BACKGROUND.

REFLECTION SEARCH IS DONE IN THE FOLLOWING WAY:
THE SCAN STARTS AT THE MINIMUM VALUES OF 2THETA, CHI AND PHI GIVEN AS INPUT. OMEGA IS ALWAYS POSITIONED TO THETA. INTENSITY IS MEASURED FOR TB SECONDS (SEE CT). NOW PHI IS INCREASED BY D(PHI) AND INTENSITY IS MEASURED AGAIN. THIS IS REPEATED UNTIL PHI(MAX) IS REACHED.
NOW CHI IS INCREASED BY D(CHI)/(2*SIN(THETA)), AND PHI IS STARTED IN THE REVERSE DIRECTION.
WHEN THE CHI-CIRCLE HAS REACHED CHI(MAX), 2THETA IS INCREASED BY D(2THETA), OMEGA IS SET TO THETA, CHI AND PHI ARE RESET TO THEIR STARTING VALUES. THIS SEARCH PROCEEDS UNTIL IT IS STOPPED BY GIVING THE COMMAND SP OR UNTIL THE END OF THE RANGE IS REACHED.

WHEN AT ANY POINT DURING THE SCAN THE INTENSITY IS HIGHER THAN TWICE THE BACKGROUND, THE ANGLES OF THAT POINT ARE PRINTED AND THE SEARCH IS RESUMED; NO OTHER ACTION (CENTERING) IS TAKEN.

SS MAKE STEPSCAN

PREREQUISITE: ST (OR CT), SV, RA (OR EQUIV.), LI

OUTPUT: I(1)
I(2)
. + PROFILE PLOT
.
I(N)
SUM OF INTENSITIES
MONITOR, DATE
ANGLES 2THETA, OMEGA, CHI, PHI OF THE CENTER OF GRAVITY OF THE SCAN.
INCREMENT OF ANGLES

THIS COMMAND IS USED TO MEASURE THE PROFILES OF SINGLE REFLECTIONS. THE POSITION LAST INPUT (BY RA, TH, ETC.) OR CALCULATED (BY RI, ETC.) IS THE CENTER OF THE SCANNED RANGE.

THE REFLECTION IS SCANNED IN THE WAY GIVEN BY SV, THE INTENSITY AT EACH STEP IS MEASURED FOR THE TIME TS GIVEN BY COMMAND ST.

ST STEP TIME

INPUT: TS (STEP TIME)

USED FOR INPUT OF STEPTIME TS ONLY.
FOR DETAILS COMPARE COMMAND CT.

SV STEP VALUES

INPUT: NUMBER OF STEPS,
STEPWIDTH OF 2THETA,
" OMEGA,
" CHI,
" PHI.

TO MEASURE A REFLECTION, THE CRYSTAL IS ROTATED THROUGH THE REFLECTING POSITION IN SMALL STEPS AND THE INTENSITY IS MEASURED FOR A GIVEN TIME AT EACH STEP.

THE NUMBER OF STEPS AND THE INCREMENT OF THE FOUR CIRCLES BETWEEN THE MEASURING POINTS IS GIVEN WITH THE ABOVE COMMAND SV.

THE MEASURING TIME FOR EACH POINT IS TS (SEE COMMAND CT).

NEGATIVE STEPWIDTHS ARE PERMITTED.

IF THE AUTOMATIC DATA COLLECTION (CD) IS DONE WITH VARIABLE OMEGA RANGE (SF, B = 1), THE STEPWIDTH OF OMEGA IS NOT TAKEN FROM SV, BUT IS CALCULATED FROM THE PARAMETERS GIVEN BY VR. THE STEPWIDTH OF 2THETA IS OBTAINED FROM THE 2THETA-OMEGA RATIO GIVEN BY SF. A.

TA TRANSFER ANGLES

PREREQUISITE: IA OR MA, RW

INPUT: FIRST-, LAST NUMBER OF THE ANGLE SETS TO BE TRANSFERRED

OUTPUT: NUMBER OF TRANSFERRED ANGLE SETS

THE PEAK COORDINATES OF THE "IM"-LIST MAY BE USED FOR REFINING THE ORIENTING MATRIX BY RF OR CE. FOR THIS PURPOSE ONE MAY TRANSFER CENTERED ANGLES FROM THE "IA"-LIST TO THE "IM"-LIST. BECAUSE THE "IM"-LIST MAY CONTAIN ONLY UP TO 2Ø PEAK COORDINATES, THE PROGRAM TAKES CARE THAT ONLY AN ALLOWED NUMBER OF ANGLES IS TRANSFERRED.

TH READ 2THETA

INPUT: 2THETA

WITH THE COMMAND RA A SET OF FOUR ANGLES IS INPUT TO THE COMPUTER. IF IT IS DESIRED TO CHANGE ONLY ONE OF THE SETTING ANGLES OF THE DIFFRACTOMETER, THE COMMANDS TH, OM, CH AND/OR PH ARE USED.

TI TITLE

INPUT: TITLE, MAXIMUM OF 4Ø CHARACTERS.
WILL BE OUTPUT BY PL.

VO VOLUME OF CELL

PREREQUISITE: IX OR LS OR RM OR RO

OUTPUT: VOLUME OF CELL

THIS COMMAND CALCULATES THE VOLUME OF THE ELEMENTARY CELL FROM THE ORIENTING MATRIX.

IF THE VOLUME IS NEGATIVE, THE CRYSTAL COORDINATE SYSTEM IS LEFT HANDED.

VR VARIABLE RANGE

INPUT: A, B, C

REFLECTIONS ARE MEASURED EITHER WITH CONSTANT OMEGA RANGE OR WITH VARIABLE RANGE, DEPENDING ON SF,B. IF VARIABLE RANGE IS TO BE USED (TO ACCOUNT FOR REFLECTION BROADENING DUE TO WAVE-LENGTH DISPERSION), THE RANGE D(OMEGA) IS CALCULATED BY:

D(OMEGA) = SQR(A + B*TAN(THETA) + C*TAN(THETA) 2)

THE NUMBER OF STEPS N IS TAKEN FROM THE COMMAND SV AND THE STEPWIDTH FOR OMEGA IS OBTAINED BY DIVIDING D(OMEGA) BY N AND ROUNDING TO THE NEAREST HUNDREDTH OF A DEGREE.

THE STEPWIDTH FOR OMEGA IS MULTIPLIED BY THE 2THETA:OMEGA RATIO FORM SF,A TO GET THE STEPWIDTH FOR 2THETA.

THE STEPWIDTHS GIVEN BY COMMAND SV ARE NEGLECTED.

WT WRITE PARAMETERS ON TAPE

INPUT: FILE-NAME IN THE FORM: MTØ:NN

PARAMETERS PRINTED BY THE COMMAND PL ARE WRITTEN ON MAGNETIC TAPE.

SEE ALSO RT.

Appendix I:

Diffractometer Control Program (BASIC)

Contents:

Page

P110.BA
LISTING.....: 0001
GOTO KREUZREFERENZLISTE.....: 0033
GOSUB KREUZREFERENZLISTE.....: 0038
VARIABLEN KREUZREFERENZLISTE.....: 0039
GOSUB LISTE.....: 0044

```
##############################################################################
    DIFF. - CONTR. - PROGR.  P110/ORPHEE                15/ 3/1984 14:49 SEITE   1
##############################################################################

    LISTING DES PROGRAMMES P110.BA
    ==============================

    0005 DIM A$[160],B$[2],F$[7],G$[9],H$[9],I$[10],J$[10]
    0010 DIM K$[2],L$[3],M$[6],N$[8],X$[4],Y$[72],Z$[6]
    0015 DIM A[3,3],B[3,3],C[3,3],D[3,3],O[3,3],P[3,3],Q[3,3],R[3,3]
    0020 DIM U[3,3],Y[3,3],Z[3,3],E[3,1],F[3,1],G[3,1],H[3,1],X[3,1]
    0025 DIM I[202],J[60],K[12],M[60],N[50],W[40]
    0030 DIM C$[73],L[240],S[10]
    0035 DATA "RWRMMMOLRATHOMCHPHACCTSTSVSFLIVRCQEQISNRINRCRRRO"
    0040 DATA "OBCOLSIMCMLPIXPIDPRFPCPRPMPQVODVAVRIPLCAVECIBSIC"
    0045 DATA "TIBCESEXWTRTLLDADRLAPPSSDSCDPDCRRDTAAALRMRIASRAH"
    0050 DATA "SPCNCEFCMAPSCPPA"
    0055 DATA "---#.##","-----#.###","------#.##","-----#.####"
    0060 DATA "--#.#######","--","----","#######","--------"
    0065 DATA "0123456789ABCDEFGHIJKLMNOPQRST*$ "
    0070 READ A$[1,48],A$[49,96],A$[97,144],A$[145]
    0075 READ F$,G$,H$,I$,J$,K$,L$,M$,N$
    0080 READ C$
    0082 ON ERR THEN STOP
    0085 ON ESC THEN GOTO 0160
    0090 LET J0=0
    0095 LET J1=0
    0100 LET L[0]=0
    0110 LET C0=LEN(A$)/2
    0115 LET C1=355/113/180
    0120 LET M[25]=.05
    0125 DEF FNA(X)=SQR(1-X*X)
    0130 MAT Y=ZER
    0135 LET Y[2,2]=1
    0140 MAT Z=ZER
    0145 LET Z[3,3]=1
    0150 CALL 70
 -> 0160 REM CC INPUT
    0161 CALL 171
    0162 CALL 508,0
    0163 ON ESC THEN GOTO 0160
    0164 LET E0=0
    0165 REM RESET LOOPS
    0167 GOTO 6400
 -> 0170 INPUT "<13>#",B$
    0180 REM CC IDENTIFICATION
    0185 FOR I0=1 TO C0
    0190   IF B$=A$[2*I0-1,2*I0] THEN GOTO 0210
    0195 NEXT I0
 -> 0200 PRINT "NOT A CC";
    0205 GOTO 0170
 -> 0207 STOP
 -> 0210 LET B$="  "
    0212 CALL 172
    0215 ON I0 THEN GOTO 0270, 0290, 0310, 0345, 0360, 0375, 0385, 0395
    0220 ON I0-8 THEN GOTO 0405, 0415, 0450, 0465, 0480, 0495, 0510, 0530
```

LISTING DES PROGRAMMES P110.BA

```
   0225 ON IO-16 THEN GOTO 5555, 5575, 0545, 0585, 0600, 0665, 0715, 0755
   0230 ON IO-24 THEN GOTO 0875, 0885, 0905, 0935, 0945, 0995, 1025, 1330
   0235 ON IO-32 THEN GOTO 1390, 1440, 1750, 1845, 1885, 1900, 1940, 1975
   0240 ON IO-40 THEN GOTO 2005, 2095, 1505, 6200, 0200, 2205, 2240, 2280
   0245 ON IO-48 THEN GOTO 6600, 2315, 3370, 0207, 6700, 6820, 7000, 7025
   0250 ON IO-56 THEN GOTO 2355, 2375, 2390, 2410, 2425, 2475, 2655, 2780
   0255 ON IO-64 THEN GOTO 2800, 7075, 7175, 3105, 3115, 6150, 3220, 7265
   0260 ON IO-72 THEN GOTO 3370, 1700, 1450, 0650, 6170, 5180, 5355, 5370
   0265 GOTO 0160
-> 0270 REM READ WAVELENGTH   RW
   0275 INPUT A0;
   0280 LET K[0]=A0/2
   0285 GOTO 0160
-> 0290 REM READ ORIENTING MATRIX   RM
   0295 MAT Q=0
   0300 MAT INPUT O
   0305 GOTO 0160
-> 0310 REM MODIFY MATRIX   MM
   0315 MAT Q=0
   0320 MAT INPUT A
   0325 MAT B=TRN(A)
   0330 MAT A=O*B
   0334 MAT O=A
   0335 MAT A=INV(B)
   0336 PRINT "VOL(NEW)="; 1/DET(B); "*VOL(OLD)"
   0337 PRINT "INVERSE OF MM:"
   0338 MAT B=TRN(A)
   0339 MAT PRINT B
   0340 GOTO 0160
-> 0345 REM RESTORE OLD MATRIX   OL
   0350 MAT O=Q
   0355 GOTO 0160
-> 0360 REM READ ANGLES   RA TH OM CH PH
   0365 INPUT W[9],W[10],W[11],W[12];
   0370 GOTO 0160
-> 0375 INPUT W[9];
   0380 GOTO 0160
-> 0385 INPUT W[10];
   0390 GOTO 0160
-> 0395 INPUT W[11];
   0400 GOTO 0160
-> 0405 INPUT W[12];
   0410 GOTO 0160
-> 0415 REM READ ANGLE CORRECTIONS   AC
   0420 INPUT W[13],W[14],W[15],W[16];
   0445 GOTO 0160
-> 0450 REM INPUT TIMES   CT ST
   0455 INPUT A0;
   0460 LET M[1]=100*A0
```

```
##############################################################################
     DIFF. - CONTR. - PROGR.  P110/ORPHEE                15/ 3/1984 14:50 SEITE   3
##############################################################################

     LISTING DES PROGRAMMES P110.BA
     ==============================

  -> 0465 INPUT A0;
     0470 LET M[2]=100*A0
     0475 GOTO 0160
  -> 0480 REM INPUT STEP VALUES    SV
     0485 INPUT M[3],M[4],M[5],M[6],M[7];
     0490 GOTO 0160
  -> 0495 REM SET FLAGS    SF
     0500 INPUT M[9],M[10],M[11],M[12],M[14];
     0505 GOTO 0160
  -> 0510 REM ANGLE LIMITS    LI
     0515 INPUT M[52],M[53],M[54],M[55],M[56],M[57];
     0520 GOTO 0160
  -> 0530 REM VARIABLE RANGE    VR
     0535 INPUT M[22],M[23],M[24];
     0540 GOTO 0160
  -> 0545 REM INPUT STANDARDS    IS
     0550 INPUT N[4];
     0555 IF N[4]=0 THEN GOTO 0160
     0560 INPUT N[5]
     0565 FOR I0=6 TO 3*N[4]+5 STEP 3
     0570    INPUT N[I0],N[I0+1],N[I0+2]
     0575 NEXT I0
     0580 GOTO 0160
  -> 0585 REM NUMBER OF FIRST REFLEXION    NR
     0590 INPUT M[21];
     0595 GOTO 0160
  -> 0600 REM INITIALIZE FILE OUTPUT    IN
     0605 INPUT Z$
     0610 INPUT Y$
     0615 FOR I0=1 TO 72
     0620    LET Y$=Y$," "
     0625 NEXT I0
     0630 INPUT X$
     0635 OPEN FILE[0,1],Z$
     0640 PRINT FILE[0],Y$
     0645 GOTO 0160
  -> 0650 REM CLOSE FILE    FC
     0655 CLOSE FILE[0]
     0657 LET X$="     "
     0658 LET Z$="       "
     0660 GOTO 0160
  -> 0665 REM READ CELL CONSTANTS    RC
     0670 GOSUB 3390
  -> 0675 MAT P=ZER
     0680 LET P[1,1]=K[7]
     0685 LET P[1,2]=K[8]*K[12]
     0690 LET P[1,3]=K[9]*K[11]
     0695 LET P[2,2]=K[8]*FNA(K[12])
     0700 LET P[2,3]=-K[9]*FNA(K[11])*K[4]
```

```
##########################################################################
DIFF. - CONTR. - PROGR.  P110/ORPHEE                15/ 3/1984 14:50 SEITE   4
##########################################################################

LISTING DES PROGRAMMES P110.BA
==============================

0705 LET P[3,3]=1/K[3]
0710 GOTO 0160
-> 0715 REM READ REZIPROCAL CONSTANTS   RR
0720 GOSUB 3390
0725 FOR I0=1 TO 6
0730   LET A0=K[I0]
0735   LET K[I0]=K[I0+6]
0740   LET K[I0+6]=A0
0745 NEXT I0
0750 GOTO 0675
-> 0755 REM READ ORIENTATION   RO
0760 FOR I0=1 TO 2
0765   INPUT E[1,1],E[2,1],E[3,1];
0770   MAT F=P*E
0775   LET G[2,1]=K[0]*SQR(F[1,1]*F[1,1]+F[2,1]*F[2,1]+F[3,1]*F[3,1])
0780   LET G[1,1]=FNA(G[2,1])
0785   LET G[3,1]=0
0790   INPUT W[2],W[3],W[4]
0795   GOSUB 3515
0800   FOR I1=1 TO 3
0805     LET C[I0,I1]=F[I1,1]
0810     LET D[I0,I1]=E[I1,1]
0815   NEXT I1
0820 NEXT I0
0825 MAT A=C
0830 GOSUB 3610
0835 MAT C=A
0840 MAT A=D
0845 GOSUB 3610
0850 MAT D=TRN(A)
0855 MAT A=D*C
0860 MAT Q=O
0865 MAT O=A*P
0870 GOTO 0160
-> 0875 REM OBSERVATIONS FOR LSQ   OB CO
0880 GOSUB 3770
-> 0885 INPUT H[1,1],H[2,1],H[3,1],W[1],W[2],W[3],W[4]
0890 GOSUB 3685
0895 GOSUB 3725
0900 GOTO 0885
-> 0905 REM LEAST SQUARES   LS
0910 MAT B=INV(C)
0915 MAT A=B*D
0920 MAT Q=O
0925 MAT O=TRN(A)
0930 GOTO 0160
-> 0935 REM INPUT MAXIMA   IM CM
0940 LET J[0]=0
-> 0945 INPUT W[1],W[2],W[3],W[4];
```

```
##############################################################################
   DIFF. - CONTR. - PROGR.  P110/ORPHEE                15/ 3/1984 14:51 SEITE   5
##############################################################################

   LISTING DES PROGRAMMES P110.BA
   ==============================

   0950 GOSUB 3685
   0955 FOR I0=1 TO 3
   0960   LET J[3*J[0]+I0]=E[I0,1]
   0965 NEXT I0
   0970 LET J[0]=J[0]+1
   0975 PRINT USING L$,J[0];
   0980 PRINT USING J$,E[1,1],E[2,1],E[3,1]
   0985 IF J[0]<20 THEN GOTO 0945
   0990 GOTO 0160
-> 0995 REM LIST PEAK COORDINATES   LP
   1000 FOR I0=1 TO J[0]
   1005   PRINT USING L$,I0;
   1010   PRINT USING J$,J[3*I0-2],J[3*I0-1],J[3*I0]
   1015 NEXT I0
   1020 GOTO 0160
-> 1025 REM DETERMINE CELL   IX
   1030 MAT Q=0
   1035 FOR I0=1 TO 3
   1040   MAT E=ZER
   1045   LET A0=0
   1050   LET A1=3
   1055   FOR I1=1 TO 2
   1060     FOR I2=0 TO J[0]-2
   1065       FOR I3=I2+1 TO J[0]-1
   1070         LET A2=0
   1075         LET I4=1
-> 1080         LET F[I4,1]=J[3*I2+I4]-J[3*I3+I4]
   1085         LET A2=A2+F[I4,1]*F[I4,1]
   1090         LET I4=I4+1
   1095         IF I4<4 THEN GOTO 1080
   1100         LET A2=SQR(A2)
   1105         MAT Q=(1/A2)*F
   1110         ON 2*I0+I1-2 THEN GOSUB 1175, 1290, 1215, 1290, 1255, 1290
   1115       NEXT I3
   1120     NEXT I2
   1125   NEXT I1
   1130   PRINT USING L$,A3,A4,A0;
   1135   MAT E=(1/A0)*E
   1140   LET A0=SQR(E[1,1]*E[1,1]+E[2,1]*E[2,1]+E[3,1]*E[3,1])
   1145   FOR I1=1 TO 3
   1150     LET O[I1,I0]=E[I1,1]
   1155     LET A[I1,I0]=E[I1,1]/A0
   1160   NEXT I1
   1165 NEXT I0
   1170 GOTO 0160
=> 1175 REM FIRST VECTOR
   1180 IF A1<A2 THEN RETURN
-> 1185 LET A1=A2
   1190 MAT H=F
```

```
##############################################################################
      DIFF. - CONTR. - PROGR.  P110/ORPHEE                15/ 3/1984 14:52 SEITE    6
##############################################################################

      LISTING DES PROGRAMMES P110.BA
      ==============================

      1195 MAT X=G
      1200 LET A3=I2+1
      1205 LET A4=I3+1
      1210 RETURN
   => 1215 REM SECOND VECTOR
      1220 IF A1<A2 THEN RETURN
      1225 LET A5=G[2,1]*A[3,1]-G[3,1]*A[2,1]
      1230 LET A6=G[3,1]*A[1,1]-G[1,1]*A[3,1]
      1235 LET A7=G[1,1]*A[2,1]-G[2,1]*A[1,1]
      1240 LET A5=A5*A5+A6*A6+A7*A7
   -> 1245 IF ABS(A5)<.01 THEN RETURN
      1250 GOTO 1185
   => 1255 REM THIRD VECTOR
      1260 IF A1<A2 THEN RETURN
      1265 LET A5=A[2,1]*A[3,2]-A[3,1]*A[2,2]
      1270 LET A6=A[3,1]*A[1,2]-A[1,1]*A[3,2]
      1275 LET A7=A[1,1]*A[2,2]-A[2,1]*A[1,2]
      1280 LET A5=A5*G[1,1]+A6*G[2,1]+A7*G[3,1]
      1285 GOTO 1245
   => 1290 REM IDENTICAL VECTORS
      1295 IF ABS(A1-A2)>.005 THEN RETURN
      1300 LET A5=X[1,1]*G[1,1]+X[2,1]*G[2,1]+X[3,1]*G[3,1]
      1305 IF ABS(A5)<.995 THEN RETURN
      1310 IF A5<0 THEN MAT F=(-1)*F
      1315 MAT E=E+F
      1320 LET A0=A0+1
      1325 RETURN
   -> 1330 REM INDICES OF PEAKS   PI
      1335 MAT A=INV(0)
      1340 FOR I0=0 TO J[0]-1
      1345   FOR I1=1 TO 3
      1350     LET E[I1,1]=J[3*I0+I1]
      1355   NEXT I1
      1360   MAT H=A*E
      1365   PRINT USING L$,I0+1;
      1370   PRINT USING J$,E[1,1],E[2,1],E[3,1];
      1375   PRINT USING F$,H[1,1],H[2,1],H[3,1]
      1380 NEXT I0
      1385 GOTO 0160
   -> 1390 REM DELETE PEAKS   DP
   -> 1395 INPUT A1;
      1400 IF A1<=0 THEN GOTO 0160
      1405 IF A1>J[0] THEN GOTO 0160
      1410 IF A1=J[0] THEN GOTO 1430
      1415 FOR I0=3*A1-2 TO 3*J[0]-3
      1420   LET J[I0]=J[I0+3]
      1425 NEXT I0
   -> 1430 LET J[0]=J[0]-1
      1435 GOTO 1395
```

```
##############################################################################
   DIFF. - CONTR. - PROGR.  P110/ORPHEE              15/ 3/1984 14:53 SEITE   7
##############################################################################

   LISTING DES PROGRAMMES P110.BA
   ==============================

-> 1440 REM REFINE ORIENTING MATRIX    RF CE
   1445 GOSUB 3770
-> 1450 MAT A=INV(D)
   1453 MAT Q=0
-> 1455 INPUT A1;
   1460 FOR I0=1 TO 3
   1465   LET E[I0,1]=J[3*A1+I0-3]
   1470 NEXT I0
   1475 MAT H=A*E
   1480 FOR I0=1 TO 3
   1485   LET H[I0,1]=INT(H[I0,1]+.5)
   1490 NEXT I0
   1495 GOSUB 3725
   1500 GOTO 1455
-> 1505 REM PRINT LIST    PL
   1506 PRINT "TITLE             TI   ";C$[33,LEN(C$)]
   1507 LET E0=1
   1508 PRINT "DATE :    ";
   1509 GOSUB 4551
   1510 PRINT "WAVELENGTH        RW   ";
   1515 PRINT USING I$,2*K[0]
   1520 PRINT "ANGLE CORRECT.    AC   ";
   1525 PRINT USING I$,W[13],W[14],W[15],W[16]
   1530 PRINT "ANGLE LIMITS      LI   ";
   1535 PRINT USING N$,M[52],M[53],M[54],M[55],M[56],M[57]
   1545 PRINT "ORIENT. MATRIX    PM"
   1550 GOSUB 1885
   1560 PRINT " "
   1570 PRINT "PRINT CELL CON.   PC   "
   1575 GOSUB 1750
   1580 LET E0=0
   1585 PRINT " "
   1590 PRINT "COUNT. TIMES      CT   ";
   1595 PRINT USING I$,M[1]/100,M[2]/100
   1600 PRINT "STEP VALUES       SV   "
   1605 PRINT "     NUMBER OF STEPS";
   1610 PRINT USING N$,M[3]
   1615 PRINT "     STEPWIDTH         ";
   1620 PRINT USING I$,M[4],M[5],M[6],M[7]
   1625 PRINT "VARIABLE RANGE    VR   ";
   1630 PRINT USING I$,M[22],M[23],M[24]
   1635 PRINT "INPUT STANDARDS IS    "
   1640 PRINT "     NUMBER OF STANDARDS";
   1645 PRINT USING N$,N[4]
   1650 IF N[4]=0 THEN GOTO 1685
   1655 PRINT "     FREQUENCY             ";
   1660 PRINT USING N$,N[5]
   1665 FOR I0=6 TO 3*N[4]+5 STEP 3
   1670   PRINT "STANDARD-REFLECTION    ";
```

```
################################################################################
      DIFF. - CONTR. - PROGR.  P110/ORPHEE                15/ 3/1984 14:54 SEITE   8
################################################################################

      LISTING DES PROGRAMMES P110.BA
      ==============================

      1675   PRINT USING N$,N[IO],N[IO+1],N[IO+2]
      1680 NEXT IO
   -> 1685 PRINT "SET FLAGS        SF   ";
      1690 PRINT USING N$,M[9],M[10],M[11],M[12],M[14]
      1691 PRINT "DATA-FILE, LAB   IN   ",Z$,X$
      1692 PRINT "CURRENT NUMBER   NR   ";M[21]
      1695 GOTO 0160
   -> 1700 REM CALCULATE NUMBER OF REFLEXIONS    CN
      1705 LET E0=1
      1710 LET E1=M[21]
      1715 LET M[21]=0
      1720 GOSUB 2475
      1725 PRINT "NUMBER OF REFLECTIONS TO BE MEASURED:";
      1730 PRINT USING M$,M[21]
      1735 LET M[21]=E1
      1740 LET E0=0
      1745 GOTO 0160
 ->=> 1750 REM PRINT CELL CONSTANTS    PC
      1755 MAT A=TRN(0)
      1760 MAT B=A*0
      1765 MAT B=INV(B)
    => 1770 FOR IO=1 TO 3
      1775   LET E[IO,1]=SQR(B[IO,IO])
      1780   PRINT USING I$,E[IO,1];
      1785 NEXT IO
   -> 1790 LET A0=B[2,3]/(E[2,1]*E[3,1])
      1795 GOSUB 3795
      1800 PRINT USING G$,A1;
      1805 LET A0=B[1,3]/(E[1,1]*E[3,1])
      1810 GOSUB 3795
      1815 PRINT USING G$,A1;
      1820 LET A0=B[1,2]/(E[1,1]*E[2,1])
      1825 GOSUB 3795
      1830 PRINT USING G$,A1;
      1835 IF E0=1 THEN RETURN
      1840 GOTO 0160
   -> 1845 REM PRINT RECIPROCAL CONSTANTS    PR
      1850 MAT A=TRN(0)
      1855 MAT B=A*0
      1860 FOR IO=1 TO 3
      1865   LET E[IO,1]=SQR(B[IO,IO])
      1870   PRINT USING J$,E[IO,1];
      1875 NEXT IO
      1880 GOTO 1790
 ->=> 1885 REM PRINT ORIENTING MATRIX    PM
      1890 MAT B=0
      1895 GOTO 1915
   -> 1900 REM PRINT SQUARED MATRIX    PQ
      1905 MAT A=TRN(0)
```

```
DIFF. - CONTR. - PROGR.  P110/ORPHEE                15/ 3/1984 14:55 SEITE   9

    LISTING DES PROGRAMMES P110.BA
    ==============================

    1910 MAT B=A*O
 -> 1915 PRINT USING J$,B[1,1],B[1,2],B[1,3]
    1920 PRINT USING J$,B[2,1],B[2,2],B[2,3]
    1925 PRINT USING J$,B[3,1],B[3,2],B[3,3];
    1930 IF E0=1 THEN RETURN
    1935 GOTO 0160
 -> 1940 REM PRINT VOLUME OF CELL    VO
    1945 LET A1=O[2,2]*O[3,3]-O[2,3]*O[3,2]
    1950 LET A2=O[2,3]*O[3,1]-O[2,1]*O[3,3]
    1955 LET A3=O[2,1]*O[3,2]-O[2,2]*O[3,1]
    1960 LET A0=A1*O[1,1]+A2*O[1,2]+A3*O[1,3]
    1965 PRINT USING H$,1/A0;
    1970 GOTO 0160
 -> 1975 REM CALCULATE D-VALUES    DV
 -> 1980 INPUT A0,A1;
    1985 LET A2=SIN(A0*C1)/(A1*K[0])
    1990 PRINT USING J$,A2;
    1995 PRINT USING I$,1/A2
    2000 GOTO 1980
 -> 2005 REM ANGLE BETWEEN VECTORS    AV
 -> 2010 FOR I0=1 TO 2
    2015   MAT F=E
    2020   INPUT W[1],W[2],W[3],W[4];
    2025   GOSUB 3685
    2030 NEXT I0
 => 2035 LET A0=0
    2040 LET A1=0
    2045 LET A2=0
    2050 FOR I0=1 TO 3
    2055   LET A0=A0+F[I0,1]*E[I0,1]
    2060   LET A1=A1+F[I0,1]*F[I0,1]
    2065   LET A2=A2+E[I0,1]*E[I0,1]
    2070 NEXT I0
    2075 LET A0=A0/SQR(A1*A2)
    2080 GOSUB 3795
    2085 PRINT USING G$,A1
    2087 IF E0=1 THEN RETURN
    2090 GOTO 2010
 -> 2095 REM READ INDICES    RI
 -> 2100 INPUT H[1,1],H[2,1],H[3,1];
    2105 GOSUB 3830
    2110 PRINT USING G$,W[9],W[10],W[11],W[12]
    2115 GOTO 2100
 -> 2205 REM CALCULATE INDICES FROM ANGLES    CI
 -> 2210 INPUT W[1],W[2],W[3],W[4];
    2215 GOSUB 3685
    2220 MAT A=INV(O)
    2225 MAT H=A*E
    2230 PRINT USING F$,H[1,1],H[2,1],H[3,1]
```

```
################################################################################
      DIFF.- CONTR.- PROGR.  P110/ORPHEE                15/ 3/1984 14:56 SEITE  10
################################################################################

      LISTING DES PROGRAMMES P110.BA
      ==============================

      2235 GOTO 2210
   -> 2240 REM CALCULATE BISECTING POSITION   BS
   -> 2245 INPUT W[1],W[2],W[3],W[4];
      2250 GOSUB 3685
      2255 MAT A=INV(D)
      2260 MAT H=A*E
      2265 GOSUB 3830
      2270 PRINT USING G$,W[9],W[10],W[11],W[12]
      2275 GOTO 2245
   -> 2280 REM INDICES OF CURRENT POSITION   IC
      2285 GOSUB 3920
      2290 GOSUB 3685
      2295 MAT A=INV(D)
      2300 MAT H=A*E
      2305 PRINT USING F$,H[1,1],H[2,1],H[3,1];
      2310 GOTO 0160
   -> 2315 REM BISECT CURRENT POSITION   BC
      2320 GOSUB 3920
      2325 GOSUB 3685
      2330 MAT A=INV(D)
      2335 MAT H=A*E
      2340 GOSUB 3830
      2345 PRINT USING G$,W[9],W[10],W[11],W[12];
      2350 GOTO 0160
   -> 2355 REM DRIVE   DR
      2360 GOSUB 4940
      2365 GOSUB 5010
      2370 GOTO 0160
   -> 2375 REM LOAD POSITION   LA
      2380 GOSUB 4910
      2385 GOTO 0160
   -> 2390 REM PRINT POSITION   PP
      2395 GOSUB 4880
      2400 PRINT USING H$,W[17],W[18],W[19],W[20];
      2405 GOTO 0160
   -> 2410 REM MAKE STEPSCAN   SS
   -> 2415 GOSUB 3950
      2420 GOTO 0160
   -> 2425 REM DOUBLE STEPSCAN   DS
      2430 FOR I0=1 TO 4
      2435   LET W[I0]=W[I0+8]
      2440 NEXT I0
      2445 GOSUB 3950
      2450 LET W[9]=-W[1]
      2455 LET W[10]=-W[2]
      2460 LET W[11]=W[3]
      2465 LET W[12]=W[4]
      2470 GOTO 2415
->=> 2475 REM COLLECT DATA   CD
```

```
##############################################################################
      DIFF. - CONTR. - PROGR.  P110/ORPHEE                15/ 3/1984 14:56 SEITE  11
##############################################################################

      LISTING DES PROGRAMMES P110.BA
      ==============================

      2480 INPUT "2-THETA-MIN,2-THETA-MAX,START-IND.:  ",A1,A2,M[34]
      2481 INPUT "PSI-MIN,PSI-MAX,DELTA-PSI:  ",M[19],M[20],M[13]
      2485 LET M[32]=SIN(.5*A1*C1)
      2490 LET M[33]=SIN(.5*A2*C1)
      2495 IF M[34]=-2 THEN GOTO 6065
      2500 IF M[34]<0 THEN GOTO 2525
      2505 INPUT M[35],M[36],M[37],M[38],M[39],M[40];
      2510 LET H[1,1]=M[35]
      2515 LET H[2,1]=M[37]
      2520 LET H[3,1]=M[39]
   -> 2525 IF M[34]<>0 THEN INPUT H[1,1],H[2,1],H[3,1];
      2530 IF N[4]<>0 THEN GOSUB 4090
   => 2535 LET B2=0
   -> 2540 MAT X=0*H
      2545 LET A0=SQR(X[1,1]*X[1,1]+X[2,1]*X[2,1]+X[3,1]*X[3,1])*K[0]
      2550 IF A0<M[32] THEN GOTO 2645
      2555 IF A0>=M[33] THEN GOTO 2645
      2560 ON M[11] THEN GOTO 2580, 2590, 2600, 2570, 2610, 2620
      2565 GOTO 2630
   -> 2570 LET A4=(H[1,1]+H[3,1])/2
      2575 IF INT(A4)<>A4 THEN GOTO 2645
   -> 2580 LET A4=(H[2,1]+H[3,1])/2
      2585 GOTO 2625
   -> 2590 LET A4=(H[3,1]+H[1,1])/2
      2595 GOTO 2625
   -> 2600 LET A4=(H[1,1]+H[2,1])/2
      2605 GOTO 2625
   -> 2610 LET A4=(H[1,1]+H[2,1]+H[3,1])/2
      2615 GOTO 2625
   -> 2620 LET A4=(H[2,1]+H[3,1]-H[1,1])/3
   -> 2625 IF INT(A4)<>A4 THEN GOTO 2645
   -> 2630 LET B1=0
      2632 LET P0=M[19]
   -> 2635 GOSUB 4195
      2637 LET P0=P0+M[13]
      2638 IF P0<=M[20] THEN GOTO 2635
      2640 IF N[4]<>0 THEN IF B2>=N[5] THEN GOSUB 4090
   -> 2645 IF M[34]>=0 THEN GOTO 2670
      2650 IF M[34]=-2 THEN RETURN
   -> 2655 REM ENTRY FOR   PD
      2660 INPUT H[1,1],H[2,1],H[3,1];
      2665 GOTO 2540
   -> 2670 LET B5=0
      2675 ON ABS(M[12]) THEN GOTO 2710, 2735, 2685
      2680 STOP
   -> 2685 LET H[1,1]=H[1,1]+1
      2690 IF H[1,1]<=M[36] THEN GOTO 2540
      2695 LET H[1,1]=M[35]
      2700 LET B5=B5+1
```

LISTING DES PROGRAMMES P110.BA

```
   2705 IF B5>=3 THEN GOTO 2760
-> 2710 LET H[2,1]=H[2,1]+1
   2715 IF H[2,1]<=M[38] THEN GOTO 2540
   2720 LET H[2,1]=M[37]
   2725 LET B5=B5+1
   2730 IF B5>=3 THEN GOTO 2760
-> 2735 LET H[3,1]=H[3,1]+1
   2740 IF H[3,1]<=M[40] THEN GOTO 2540
   2745 LET H[3,1]=M[39]
   2750 LET B5=B5+1
   2755 IF B5<3 THEN GOTO 2685
-> 2760 PRINT
   2765 IF E0=1 THEN RETURN
   2770 PRINT "ENDE";
   2775 GOTO 0160
-> 2780 REM CENTER REFLEXION   CR
   2782 INPUT "MAX. DISCREP.: ",S[4],S[5],S[6]
   2785 GOSUB 4910
   2787 PRINT USING F$,W[9],W[10],W[11],W[12]
   2790 GOSUB 4655
   2795 GOTO 0160
-> 2800 REM REDUCE CELL      RD
   2805 MAT Q=0
   2810 MAT A=INV(D)
   2815 MAT U=TRN(A)
   2820 GOTO 2830
-> 2825 MAT A=TRN(U)
-> 2830 MAT D=A*U
   2835 LET E0=1
   2840 MAT B=0
   2845 GOSUB 1770
   2847 PRINT
   2850 LET E0=0
   2855 MAT B=IDN
   2860 IF ABS(D[1,2])>D[1,1]*.5 THEN GOTO 2910
   2865 IF ABS(D[1,2])>D[2,2]*.5 THEN GOTO 2925
   2870 IF ABS(D[1,3])>D[1,1]*.5 THEN GOTO 2940
   2875 IF ABS(D[1,3])>D[3,3]*.5 THEN GOTO 2955
   2880 IF ABS(D[2,3])>D[2,2]*.5 THEN GOTO 2970
   2885 IF ABS(D[2,3])>D[3,3]*.5 THEN GOTO 2985
   2890 MAT A=TRN(U)
   2895 MAT D=INV(A)
   2900 PRINT "VOL=";DET(A)
   2905 GOTO 0160
-> 2910 REM B RED BY A
   2915 LET B[1,2]=-1*SGN(D[1,2])
   2920 GOTO 2995
-> 2925 REM A RED BY B
   2930 LET B[2,1]=-1*SGN(D[1,2])
```

LISTING DES PROGRAMMES P110.BA

```
   2935 GOTO 2995
-> 2940 REM C RED BY A
   2945 LET B[1,3]=-1*SGN(O[1,3])
   2950 GOTO 2995
-> 2955 REM A RED BY C
   2960 LET B[3,1]=-1*SGN(O[1,3])
   2965 GOTO 2995
-> 2970 REM C RED BY B
   2975 LET B[2,3]=-1*SGN(O[2,3])
   2980 GOTO 2995
-> 2985 REM B RED BY C
   2990 LET B[3,2]=-1*SGN(O[2,3])
-> 2995 REM MATMUL
   3000 MAT A=U
   3005 MAT U=A*B
   3010 GOTO 2825
-> 3105 REM CENTER LIST OF REFLEXIONS   LR MR
   3110 GOSUB 3770
-> 3115 INPUT "NUMBER OF REF.: ",J[0]
   3117 INPUT "MAX. DISCREP.: ",S[4],S[5],S[6]
   3120 FOR I0=1 TO 3*J[0] STEP 3
   3125   INPUT J[I0],J[I0+1],J[I0+2]
   3130 NEXT I0
   3135 FOR I3=1 TO J[0]
   3140   PRINT
   3145   FOR I1=1 TO 3
   3150     LET H[I1,1]=J[3*I3+I1-3]
   3155     PRINT USING L$,H[I1,1];
   3160   NEXT I1
   3162   PRINT
   3165   GOSUB 3830
   3170   GOSUB 4940
   3172   IF M[8]<>0 THEN GOTO 3210
   3173   PRINT USING F$,W[9],W[10],W[11],W[12]
   3175   GOSUB 5010
   3180   GOSUB 4655
   3182   IF M[8]<>0 THEN GOTO 3210
   3185   FOR I1=1 TO 4
   3190     LET W[I1]=W[I1+8]
   3195   NEXT I1
   3200   GOSUB 3685
   3201   IF L[0]>=60 THEN GOTO 3206
   3202   FOR I1=1 TO 4
   3203     LET L[4*L[0]+I1]=W[I1+8]
   3204   NEXT I1
   3205   LET L[0]=L[0]+1
-> 3206   FOR I1=1 TO 3
   3207     LET J[3*I3+I1-3]=E[I1,1]
   3208   NEXT I1
```

```
DIFF. - CONTR. - PROGR.  P110/ORPHEE                15/ 3/1984 14:59 SEITE  14

LISTING DES PROGRAMMES P110.BA
==============================

   3209    GOSUB 3725
-> 3210 NEXT I3
   3215 GOTO 0160
-> 3220 REM SEARCH REFLECTIONS    SR
   3225 LET J[0]=0
   3230 FOR I0=43 TO 51
   3235    INPUT M[I0];
   3240 NEXT I0
   3245 PRINT
   3250 LET B0=0
   3255 LET W[9]=M[43]
-> 3260 LET W[10]=W[9]/2
   3265 LET W[11]=M[46]
-> 3269 REM JUMP-ADR
   3270 LET W[12]=M[49]
   3271 IF M[51]<0 THEN LET W[12]=M[50]
-> 3275 LET M[0]=M[1]
   3280 GOSUB 5090
   3285 IF B0=0 THEN GOTO 3335
   3290 IF I[0]>6+2*I[7]+5*SQR(I[7]) THEN GOTO 3350
   3295 LET I[7]=.75*I[7]+.25*I[0]
-> 3300 LET W[12]=W[12]+M[51]
-> 3301 IF M[51]<0 THEN IF W[12]>M[49] THEN GOTO 3275
   3302 IF M[51]<0 THEN GOTO 3306
   3305 IF W[12]<M[50] THEN GOTO 3275
-> 3306 LET M[51]=-M[51]
   3310 LET W[11]=W[11]+M[48]/(2*SIN(W[10]*C1))
   3315 IF W[11]<M[47] THEN GOTO 3269
   3320 LET W[9]=W[9]+M[45]
   3325 IF W[9]<M[44] THEN GOTO 3260
   3330 GOTO 0160
-> 3335 LET I[7]=I[0]
   3340 LET B0=1
   3345 GOTO 3300
-> 3350 PRINT USING F$,W[9],W[10],W[11],W[12];
   3355 PRINT USING M$,I[0]
   3360 LET W[12]=W[12]+5*M[51]
   3365 GOTO 3301
   3367 REM EMERGENCY STOP       ES
-> 3370 REM STOP    SP
   3375 CALL 71
   3380 CALL 70
   3385 GOTO 0160
=> 3390 REM CALCULATE RECIPROCAL CELL CONSTANTS
   3395 FOR I0=1 TO 3
   3400    INPUT K[I0];
   3405    FOR I1=1 TO I0
   3410       LET A[I0,I1]=K[I0]*K[I1]
   3415    NEXT I1
```

```
##############################################################################
     DIFF. - CONTR. - PROGR.  P110/ORPHEE                15/ 3/1984 15:  0 SEITE  15
##############################################################################

     LISTING DES PROGRAMMES P110.BA
     ==============================

     3420 NEXT IO
     3425 FOR IO=4 TO 6
     3430   INPUT AO;
     3435   LET K[IO]=COS(AO*C1)
     3440 NEXT IO
     3445 LET A[2,1]=A[2,1]*K[6]
     3450 LET A[1,2]=A[2,1]
     3455 LET A[3,2]=A[3,2]*K[4]
     3460 LET A[2,3]=A[3,2]
     3465 LET A[3,1]=A[3,1]*K[5]
     3470 LET A[1,3]=A[3,1]
     3475 MAT A=INV(A)
     3480 FOR IO=1 TO 3
     3485   LET K[IO+6]=SQR(A[IO,IO])
     3490 NEXT IO
     3495 LET K[10]=A[3,2]/(K[8]*K[9])
     3500 LET K[11]=A[3,1]/(K[9]*K[7])
     3505 LET K[12]=A[2,1]/(K[7]*K[8])
     3510 RETURN
  => 3515 REM SETUP ROTATION MATRIX
     3520 LET AO=-W[2]
     3525 GOSUB 3580
     3530 LET Y[1,1]=COS(W[3]*C1)
     3535 LET Y[3,3]=Y[1,1]
     3540 LET Y[1,3]=SIN(-W[3]*C1)
     3545 LET Y[3,1]=-Y[1,3]
     3550 MAT A=Y*Z
     3555 LET AO=-W[4]
     3560 GOSUB 3580
     3565 MAT B=Z*A
     3570 MAT E=B*G
     3575 RETURN
  => 3580 REM Z ROTATION MATRIX
     3585 LET Z[1,1]=COS(AO*C1)
     3590 LET Z[2,2]=Z[1,1]
     3595 LET Z[2,1]=SIN(AO*C1)
     3600 LET Z[1,2]=-Z[2,1]
     3605 RETURN
  => 3610 REM ORTHOGONAL SYSTEM
     3615 FOR I3=3 TO 1 STEP -1
     3620   LET I1=I3+1
     3625   IF I1>3 THEN LET I1=1
     3630   LET I2=I1+1
     3635   IF I2>3 THEN LET I2=1
     3640   LET A[I3,1]=A[I1,2]*A[I2,3]-A[I2,2]*A[I1,3]
     3645   LET A[I3,2]=A[I1,3]*A[I2,1]-A[I2,3]*A[I1,1]
     3650   LET A[I3,3]=A[I1,1]*A[I2,2]-A[I2,1]*A[I1,2]
     3655   LET AO=SQR(A[I3,1]*A[I3,1]+A[I3,2]*A[I3,2]+A[I3,3]*A[I3,3])
     3660   FOR I4=1 TO 3
```

```
##############################################################################
      DIFF. - CONTR. - PROGR.  P110/ORPHEE                15/ 3/1984 15:  0 SEITE  1
##############################################################################

      LISTING DES PROGRAMMES P110.BA
      ==============================

      3665      LET A[I3,I4]=A[I3,I4]/A0
      3670    NEXT I4
      3675 NEXT I3
      3680 RETURN
   => 3685 REM ORTHOGONAL COORDINATES FROM ANGLES
      3690 LET A0=.5*W[1]*C1
      3695 LET A1=SIN(A0)/K[0]
      3700 LET G[1,1]=COS(A0)*A1
      3705 LET G[2,1]=SIN(A0)*A1
      3710 LET G[3,1]=0
      3715 GOSUB 3515
      3720 RETURN
   => 3725 REM SUMMATIONS FOR LSQ
      3730 FOR I0=1 TO 3
      3735    FOR I1=1 TO 3
      3740       LET C[I0,I1]=C[I0,I1]+H[I0,1]*H[I1,1]
      3745       LET D[I0,I1]=D[I0,I1]+H[I0,1]*E[I1,1]
      3750       LET R[I0,I1]=R[I0,I1]+E[I0,1]*E[I1,1]
      3755    NEXT I1
      3760 NEXT I0
      3765 RETURN
   => 3770 REM CLEAR MATRICES
      3775 MAT C=ZER
      3780 MAT D=ZER
      3785 MAT R=ZER
      3790 RETURN
   => 3795 REM ARCCOS
      3800 IF A0=0 THEN GOTO 3820
      3805 LET A1=ATN(FNA(A0)/A0)/C1
      3810 IF A1<0 THEN LET A1=A1+180
      3815 RETURN
   -> 3820 LET A1=90
      3825 RETURN
   => 3830 REM CALCULATE XYZ + ANGLES
      3835 MAT X=0*H
   => 3840 LET A0=SQR(X[1,1]*X[1,1]+X[2,1]*X[2,1]+X[3,1]*X[3,1])*K[0]
      3845 IF A0>=1 THEN LET A0=0
      3850 LET W[10]=ATN(A0/FNA(A0))/C1
      3855 LET W[9]=2*W[10]
      3860 LET A1=SQR(X[1,1]*X[1,1]+X[2,1]*X[2,1])
      3865 IF A1<.000003 THEN GOTO 3895
      3870 LET W[11]=ATN(X[3,1]/A1)/C1
      3875 IF X[1,1]=0 THEN GOTO 3910
      3880 LET W[12]=ATN(-X[2,1]/X[1,1])/C1
      3885 IF X[1,1]<0 THEN LET W[12]=W[12]+180
      3887 IF W[12]>180 THEN LET W[12]=W[12]-360
      3890 RETURN
   -> 3895 LET W[11]=90*SGN(X[3,1])
      3900 LET W[12]=0
```

```
##############################################################################
    DIFF. - CONTR. - PROGR.  P110/ORPHEE                15/ 3/1984 15:  1 SEITE  17
##############################################################################

    LISTING DES PROGRAMMES P110.BA
    ==============================

    3905 RETURN
 -> 3910 LET W[12]=-90*SGN(X[2,1])
    3915 RETURN
 => 3920 REM TRANSFER CURRENT POSITION
    3925 GOSUB 4880
    3930 FOR I0=1 TO 4
    3935   LET W[I0]=W[I0+16]
    3940 NEXT I0
    3945 RETURN
 => 3950 REM SR STEPSCAN
    3955 LET A3=(M[3]-1)/2
    3960 FOR I0=1 TO 4
    3965   LET W[I0+8]=W[I0+8]-A3*M[I0+3]
    3970 NEXT I0
    3975 LET A4=0
    3980 LET I2=M[3]
    3985 LET S0=0
    3990 LET S1=0
    3992 LET S2=1
    3995 LET M[0]=M[2]
    4000 FOR I3=1 TO I2
    4005   GOSUB 5090
    4010   LET I[I3]=I[0]
    4013   PRINT USING N$,I[0];
    4014   IF INT(I3/8)=I3/8 THEN PRINT
    4015   IF I[0]>S2 THEN LET S2=I[0]
    4020   LET S0=S0+I[0]
    4025   LET S1=S1+I[0]*(I3-A3-1)
    4045   FOR I1=1 TO 4
    4050     LET W[I1+8]=W[I1+8]+M[I1+3]
    4055   NEXT I1
    4058 NEXT I3
    4060 PRINT
    4061 IF S2<50 THEN LET S2=50
    4062 FOR I3=1 TO I2
    4063   PRINT USING N$,I[I3];
    4064   PRINT  TAB(11);"I"; TAB(I[I3]/S2*50+12);"*"
    4065 NEXT I3
    4067 IF I[I2]<I[1] THEN LET I[1]=I[I2]
    4068 PRINT
    4069 PRINT "SUM OF INTENSITIES: ",S0
    4070 LET S0=S0-M[3]*I[1]
    4071 PRINT "MONITOR: ";M[0]/100;
    4072 PRINT "DATE: ";
    4073 LET E0=1
    4074 GOSUB 4551
    4075 PRINT
    4076 LET E0=0
    4077 LET S2=S1/S0
```

```
################################################################################
#       DIFF. - CONTR. - PROGR.  P110/ORPHEE              15/ 3/1984 15: 2 SEITE  18
################################################################################

      LISTING DES PROGRAMMES P110.BA
      ==============================

      4078 FOR I3=1 TO 4
      4079   LET W[I3+8]=W[I3+8]+(-A3-1+S2)*M[I3+3]
      4080   PRINT USING G$,W[I3+8];
      4081 NEXT I3
      4082 PRINT USING G$,M[4],M[5],M[6],M[7]
      4083 PRINT
      4085 RETURN
   => 4090 REM MEASURE STANDARDS
      4095 LET N[1]=H[1,1]
      4100 LET N[2]=H[2,1]
      4105 LET N[3]=H[3,1]
      4110 LET N[0]=0
   -> 4115 FOR I0=1 TO 3
      4120   LET H[I0,1]=N[3*N[0]+I0+5]
      4125 NEXT I0
      4130 LET B1=3
      4135 MAT X=0*H
      4140 LET A0=SQR(X[1,1]*X[1,1]+X[2,1]*X[2,1]+X[3,1]*X[3,1])*K[0]
      4145 IF A0<M[32] THEN LET B1=4
      4150 IF A0>=M[33] THEN LET B1=4
      4152 LET P0=.000001
      4155 GOSUB 4195
      4160 LET N[0]=N[0]+1
      4165 IF N[0]<N[4] THEN GOTO 4115
      4170 LET B2=0
      4175 LET H[1,1]=N[1]
      4180 LET H[2,1]=N[2]
      4185 LET H[3,1]=N[3]
      4190 RETURN
   => 4195 REM MEASURE ONE REFLEXION
      4200 REM SETUP
      4205 GOSUB 3840
      4207 IF P0=0 THEN LET P0=.000001
      4208 GOSUB 5205
      4210 FOR I0=1 TO 4
      4215   LET W[I0]=W[I0+8]
      4220 NEXT I0
      4225 LET B3=0
      4227 IF W[10]<M[52] THEN GOTO 4470
      4228 IF W[10]>M[53] THEN GOTO 4470
      4229 IF W[11]<M[54] THEN GOTO 4470
      4230 IF W[11]>M[55] THEN GOTO 4470
      4235 IF W[12]<M[56] THEN GOTO 4470
      4240 IF W[12]>M[57] THEN GOTO 4470
      4245 LET B1=B1+1
      4250 LET B3=1
      4255 IF M[10]=0 THEN GOTO 4280
      4260 LET A2=A0/FNA(A0)
      4265 LET A3=SQR(M[22]+M[23]*A2+M[24]*A2*A2)
```

LISTING DES PROGRAMMES P110.BA

```
4270 LET M[5]=INT(100*A3/M[3]+.5)/100
4275 LET M[4]=M[5]*M[9]
-> 4280 LET M[41]=100*M[5]/M[2]
4285 LET A3=(M[3]+1)/2
4290 FOR I0=1 TO 4
4295   LET W[I0+8]=W[I0+8]-A3*M[I0+3]
4300 NEXT I0
4305 LET S0=0
4310 LET S1=0
4315 LET I2=M[3]
4320 REM MEASURE
4325 LET M[0]=M[1]
4330 IF E0=1 THEN GOTO 4637
4335 GOSUB 5090
4340 LET I[1]=I[0]
4342 LET I[102]=A7
4345 LET M[0]=M[2]
4350 FOR I3=1 TO I2
4355   FOR I1=1 TO 4
4360     LET W[I1+8]=W[I1+8]+M[I1+3]
4365   NEXT I1
4370   GOSUB 5090
4375   LET I[I3+1]=I[0]
4377   LET I[I3+102]=A7
4380   LET S0=S0+I[0]
4385   IF I[0]>S1 THEN LET S1=I[0]
4390 NEXT I3
4392 LET A6=S1
4395 FOR I1=1 TO 4
4400   LET W[I1+8]=W[I1+8]+M[I1+3]
4405 NEXT I1
4410 LET M[0]=M[1]
4415 GOSUB 5090
4420 LET I[I2+2]=I[0]
4422 LET I[I2+103]=A7
4425 REM EVALUATE
4430 LET S2=I[1]+I[I2+2]
4435 LET S3=.5*S2*M[2]/M[1]
4440 IF S1<10*S3 THEN LET S1=10*S3
4445 LET S4=S0-S3*M[3]
4450 LET S5=.0004*S4*S4+S0+.5*S3*M[2]*M[3]*M[3]/M[1]
4455 LET S5=SQR(S5)
4460 LET S6=S4*M[41]
4465 LET S7=S5*M[41]
-> 4470 REM PRINTER OUTPUT
4475 PRINT "<127>"
4480 PRINT USING M$,M[21];
4485 PRINT USING L$,H[1,1],H[2,1],H[3,1];
4490 PRINT USING F$,W[1],W[2],W[3],W[4],P0;
```

```
DIFF. - CONTR. - PROGR.  P110/ORPHEE                15/ 3/1984 15: 4 SEITE  20

LISTING DES PROGRAMMES P110.BA
==============================

4495 PRINT USING K$,B1;
4500 IF B3=0 THEN GOTO 4645
4505 PRINT USING L$,M[3];
4510 PRINT USING "-#.###",M[4],M[5]
4515 LET I3=INT((I2-1)/72+1)
4520 FOR I0=1 TO I2 STEP I3
4525   LET A0=I[I0+1]*29/S1+1.5
4530   PRINT C$[A0,A0];
4535 NEXT I0
4540 PRINT
4545 PRINT USING "------",I[1];
4546 PRINT USING N$,S0;
4547 PRINT USING "------",I[I2+2];
4548 PRINT USING N$,S4,S5;
4550 PRINT USING H$,S6,S7;
=> 4551 PRINT USING "###/",SYS(1);
4552 PRINT USING "##/",SYS(2);
4554 PRINT USING "###",SYS(11);
4555 PRINT USING "#","H";
4556 PRINT USING "##",SYS(12);
4557 PRINT USING "#","M";
4558 PRINT USING "##",SYS(13);
4559 PRINT USING "#","S"
4560 IF E0=1 THEN RETURN
4561 IF M[14]=0 THEN GOTO 4630
4562 IF M[14]=2 THEN GOTO 4630
4563 REM TAPE OUTPUT
4565 PRINT FILE[0],USING "####",X$
4567 PRINT FILE[0],USING "##/",SYS(1),SYS(2),SYS(3),SYS(11),SYS(12),SYS(1
       3)
4570 PRINT FILE[0],USING M$,M[21]
4575 PRINT FILE[0],USING L$,H[1,1],H[2,1],H[3,1]
4580 PRINT FILE[0],USING F$,W[1],W[2],W[3],W[4],P0
4585 PRINT FILE[0],USING K$,B1
4590 PRINT FILE[0],USING M$,M[3]
4595 PRINT FILE[0],USING "--#.###",M[4],M[5]
4600 PRINT FILE[0],USING I$,M[1]/100,M[2]/100
4605 FOR I0=1 TO I2+2
4610   PRINT FILE[0],USING N$,I[I0]
4612   PRINT FILE[0],USING M$,I[I0+101]
4615 NEXT I0
4620 PRINT FILE[0],USING N$,I[1],S0,I[I2+2],S4,S5
4625 PRINT FILE[0],USING H$,S6,S7
-> 4630 REM **********************
4631 IF M[14]<2 THEN GOTO 4637
4632 IF A6<50 THEN LET A6=50
4633 FOR I0=1 TO I2
4634   PRINT USING N$,I[I0+1];
4635   PRINT  TAB(11);"I"; TAB(I[I0+1]/A6*50+12);"*"
```

```
DIFF. - CONTR. - PROGR.  P110/ORPHEE                15/ 3/1984 15:  4 SEITE  21
```

LISTING DES PROGRAMMES P110.BA

```
 4636 NEXT IO
-> 4637 LET M[21]=M[21]+1
 4638 LET B2=B2+1
 4640 RETURN
-> 4645 PRINT
 4650 RETURN
=> 4655 REM SEARCH MAXIMUM
 4660 FOR IO=1 TO 4
 4665   LET W[IO+4]=0
 4670 NEXT IO
 4671 FOR IO=1 TO 3
 4672   LET S[IO]=1
 4673 NEXT IO
 4675 FOR I4=1 TO 4
 4677   IF ABS(S[1])<S[4] THEN IF ABS(S[2])<S[5] THEN IF ABS(S[3])<S[6] TH
        EN GOTO 4743
 4680   LET W[6]=M[5]
 4685   GOSUB 4750
 4687   IF M[8]<>0 THEN RETURN
 4690   LET W[6]=0
 4695   LET W[5]=M[4]
 4700   GOSUB 4750
 4702   IF M[8]<>0 THEN RETURN
 4705   LET W[5]=0
 4710   LET W[7]=M[6]
 4715   GOSUB 4750
 4717   IF M[8]<>0 THEN RETURN
 4720   LET W[7]=0
 4721   GOSUB 5090
 4722   PRINT USING F$,S[1],S[2],S[3];
 4723   PRINT USING M$,I[0];
 4724   PRINT USING F$,W[9],W[10],W[11],W[12]
 4725   REM LEERZEILE
 4726   IF I4<4 THEN GOTO 4731
 4727   IF ABS(S[1])<S[4] THEN IF ABS(S[2])<S[5] THEN IF ABS(S[3])<S[6] TH
        EN GOTO 4731
 4728   PRINT USING F$,W[9],W[10],W[11],W[12];
 4729   PRINT "   DEVIATIONS EXCEED LIMITS AFTER 4 CYCLES"
 4730   GOTO 4745
-> 4731 NEXT I4
-> 4743 PRINT USING F$,W[9],W[10],W[11],W[12];
 4744 PRINT "   CENTERED WITHIN LIMITS"
-> 4745 RETURN
=> 4750 REM PROFILE FOR MAXIMUM
 4754 IF I4>1 THEN GOTO 4760
 4755 IF W[6]>0 THEN LET A3=(M[3]-1)/2
 4756 IF W[5]>0 THEN LET A4=(M[3]-1)/2
 4757 IF W[7]>0 THEN LET A5=(M[3]-1)/2
-> 4760 FOR IO=1 TO 4
```

```
################################################################################
      DIFF. - CONTR. - PROGR.  P110/ORPHEE                15/ 3/1984 15:  4 SEITE  22
################################################################################

      LISTING DES PROGRAMMES P110.BA
      ==============================

      4765   LET W[I0]=W[I0+8]
      4770 NEXT I0
      4771 IF W[6]>0 THEN LET W[10]=W[10]-A3*W[6]
      4772 IF W[5]>0 THEN LET W[9]=W[9]-A4*W[5]
      4773 IF W[7]>0 THEN LET W[11]=W[11]-A5*W[7]
      4780 IF W[6]>0 THEN LET I2=2*A3+1
      4781 IF W[5]>0 THEN LET I2=2*A4+1
      4782 IF W[7]>0 THEN LET I2=2*A5+1
      4785 LET S0=0
      4790 LET S1=0
      4795 LET M[0]=M[2]
      4800 FOR I5=1 TO I2
      4805   GOSUB 5090
      4807   IF M[8]<>0 THEN GOTO 4842
      4810   LET I[I5]=I[0]
      4815   LET S0=S0+I[0]
      4820   IF W[6]>0 THEN LET S1=S1+I[0]*(I5-A3-1)
      4821   IF W[5]>0 THEN LET S1=S1+I[0]*(I5-A4-1)
      4822   IF W[7]>0 THEN LET S1=S1+I[0]*(I5-A5-1)
      4825   FOR I1=1 TO 4
      4830     LET W[I1+8]=W[I1+8]+W[I1+4]
      4835   NEXT I1
      4840 NEXT I5
      4841 GOTO 4845
->    4842 FOR I5=1 TO 1
      4843 NEXT I5
      4844 RETURN
->    4845 IF I[I2]<I[1] THEN LET I[1]=I[I2]
      4850 IF W[6]>0 THEN LET S0=S0-(2*A3+1)*I[1]
      4851 IF W[5]>0 THEN LET S0=S0-(2*A4+1)*I[1]
      4852 IF W[7]>0 THEN LET S0=S0-(2*A5+1)*I[1]
      4855 LET S2=S1/S0
      4856 IF W[6]>0 THEN LET S[2]=S2*W[6]
      4857 IF W[5]>0 THEN LET S[1]=S2*W[5]
      4858 IF W[7]>0 THEN LET S[3]=S2*W[7]
      4860 FOR I0=1 TO 4
      4861   LET W[I0+8]=W[I0]+S2*W[I0+4]
      4862 NEXT I0
      4863 IF I[1]>I[I2-1]+3/2*SQR(I[I2-1]) THEN IF I[2]>I[I2-2]+3/2*SQR(I[I2-2
             ]) THEN GOTO 4879
      4864 IF I[I2-1]>I[1]+3/2*SQR(I[1]) THEN IF I[I2-2]>I[2]+3/2*SQR(I[2]) THE
             N GOTO 4879
      4865 IF W[6]=0 THEN GOTO 4869
      4866 FOR I6=2 TO I2
      4867   IF I[I6]<I[1] THEN LET A3=A3-.5
      4868 NEXT I6
->    4869 REM JUMP-ADR
      4870 IF W[5]=0 THEN GOTO 4874
      4871 FOR I6=2 TO I2
```

```
##############################################################################
     DIFF. - CONTR. - PROGR.  P110/ORPHEE                15/ 3/1984 15:  5 SEITE  23
##############################################################################

     LISTING DES PROGRAMMES P110.BA
     ==============================

     4872   IF I[I6]<I[1] THEN LET A4=A4-.5
     4873 NEXT I6
  -> 4874 REM JUMP-ADR
     4875 IF W[7]=0 THEN GOTO 4879
     4876 FOR I6=2 TO I2
     4877   IF I[I6]<I[1] THEN LET A5=A5-.5
     4878 NEXT I6
  -> 4879 RETURN
  => 4880 REM READ DIGITIZERS AND CONVERT TO REAL POSITION
     4885 CALL 175
  -> 4887 CALL 173,J0,J1
     4889 IF J0=0 THEN GOTO 4887
     4890 IF J1<>4 THEN GOTO 5155
     4892 CALL 176,W[33]
     4894 LET W[36]=W[36]+W[35]
  -> 4896 IF W[36]<-50000 THEN LET W[36]=W[36]+100000
     4897 IF W[36]<-50000 THEN GOTO 4896
     4898 FOR I0=1 TO 4
  -> 4900   IF W[I0+32]>50000 THEN LET W[I0+32]=W[I0+32]-100000
     4901   IF W[I0+32]>50000 THEN GOTO 4900
     4902   LET W[I0+16]=W[I0+32]/100-W[I0+12]
     4904 NEXT I0
     4905 RETURN
  => 4910 REM SR LOAD POSITION
     4915 GOSUB 4880
     4920 FOR I0=1 TO 4
     4925   LET W[I0+8]=W[I0+16]
     4930 NEXT I0
     4935 RETURN
  => 4940 REM LOAD POSITIONS AND STEPS
     4945 FOR I0=1 TO 4
     4950   LET W[I0+20]=INT(100*M[I0+3]+.5)
     4952   IF W[I0+20]<0 THEN LET W[I0+20]=W[I0+20]+100000
     4955   LET W[I0+24]=INT(100*(W[I0+8]+W[I0+12])+.5)
     4958   IF W[I0+24]<0 THEN LET W[I0+24]=W[I0+24]+100000
     4960 NEXT I0
     4967 LET M[8]=0
     4970 IF (W[10]+W[14])<M[52] THEN GOTO 4990
     4972 IF (W[10]+W[14])>M[53] THEN GOTO 4990
     4974 IF (W[11]+W[15])<M[54] THEN GOTO 4990
     4976 IF (W[11]+W[15])>M[55] THEN GOTO 4990
     4978 IF (W[12]+W[16])<M[56] THEN GOTO 4990
     4980 IF (W[12]+W[16])>M[57] THEN GOTO 4990
     4982 LET W[28]=W[28]-W[27]
     4983 IF W[28]<0 THEN LET W[28]=W[28]+100000
     4985 GOTO 5000
  -> 4990 LET M[8]=1
     4992 PRINT " POSITION ";
     4993 PRINT USING H$,W[9]+W[13],W[10]+W[14],W[11]+W[15],W[12]+W[16];
```

LISTING DES PROGRAMMES P110.BA

```
    4994 PRINT " OUTSIDE ANGLE-LIMITS  "
    4995 GOTO 5005
 -> 5000 CALL 177,W[21],W[25]
 -> 5005 RETURN
 => 5010 REM SET POSITION
    5012 IF M[8]<>0 THEN RETURN
    5015 CALL 178
 -> 5020 CALL 174,J1
    5025 IF J1=8 THEN GOTO 5020
    5040 RETURN
 => 5045 REM MEASURE ONE POINT
    5047 IF M[8]<>0 THEN RETURN
    5048 LET A7=SYS(17)
    5050 CALL 271,-M[0]
 -> 5060 CALL 173,J0,J1
    5065 IF J0=0 THEN GOTO 5060
    5070 IF J1<>3 THEN GOTO 5155
    5072 LET A7=SYS(17)-A7
    5080 CALL 273,I[0]
    5085 RETURN
 => 5090 REM GO AND MEASURE
    5095 GOSUB 4940
    5097 GOSUB 5010
    5100 GOSUB 5045
    5105 RETURN
 => 5110 REM MEASURE INTEGRAL
    5112 IF M[8]<>0 THEN RETURN
    5115 CALL 272,-M[2],-M[3]
 -> 5125 CALL 173,J0,J1
    5130 IF J0=0 THEN GOTO 5125
    5135 IF J1<>2 THEN GOTO 5155
    5145 CALL 273,I[2]
    5150 RETURN
 -> 5155 REM UNEXPECTED INTERRUPT
    5160 PRINT "UNEXPECTED INTERRUPT ",J1;
    5165 CALL 71
    5170 STOP
    5175 GOTO 0160
 -> 5180 REM PSI ROTATION   PS
    5185 INPUT P0;
    5190 GOSUB 5205
    5195 PRINT USING G$,W[9],W[10],W[11],W[12]
    5200 GOTO 0160
 => 5205 REM PSI ROTATION
    5207 IF ABS(W[11])<.001 THEN LET W[11]=.001
    5210 LET W[2]=W[10]
    5215 LET W[3]=W[11]
    5220 LET W[4]=W[12]
 => 5225 GOSUB 3515
```

```
##############################################################################
     DIFF. - CONTR. - PROGR.  P110/ORPHEE                15/ 3/1984 15:  6 SEITE  25
##############################################################################

     LISTING DES PROGRAMMES P110.BA
     ==============================

     5230 LET A0=W[9]/2
     5235 GOSUB 3580
     5240 MAT A=B*Z
     5245 MAT B=IDN
     5250 LET B[2,2]=COS(P0*C1)
     5255 LET B[3,3]=B[2,2]
     5260 LET B[3,2]=SIN(P0*C1)
     5265 LET B[2,3]=-B[3,2]
     5270 MAT C=Z*B
     5275 MAT B=TRN(C)
     5280 MAT C=A*B
     5285 IF C[3,1]=0 THEN LET C[3,1]=.000001
     5290 LET W[10]=ATN(C[3,2]/C[3,1])/C1
     5295 IF C[3,3]<>0 THEN GOTO 5310
     5300 LET W[11]=-90
     5305 GOTO 5315
  -> 5310 LET W[11]=ATN((C[3,2]/SIN(W[10]*C1))/C[3,3])/C1
  -> 5315 IF SGN(W[11])<>SGN(W[3]) THEN LET W[11]=W[11]+180*SGN(W[3])
     5320 LET A0=SIN(W[11]*C1)
     5322 IF W[11]>180 THEN LET W[11]=W[11]-360
     5323 IF W[11]<-180 THEN LET W[11]=W[11]+360
     5325 LET A1=C[1,3]/A0
     5330 LET A2=C[2,3]/A0
     5335 IF A1=0 THEN LET A1=.000001
     5340 LET W[12]=-ATN(A2/A1)/C1
     5345 IF A1>0 THEN LET W[12]=W[12]+180
     5347 IF W[12]>180 THEN LET W[12]=W[12]-360
     5348 IF W[12]<-180 THEN LET W[12]=W[12]+360
     5350 RETURN
  -> 5355 REM COLLECT PSI DATA   CP PA
     5365 INPUT P1
  -> 5370 INPUT H[1,1],H[2,1],H[3,1]
     5375 GOSUB 3830
     5380 LET W[2]=W[10]
     5385 LET W[3]=W[11]
     5390 LET W[4]=W[12]
     5395 LET P0=.000001
  -> 5400 GOSUB 5225
     5430 LET A3=(M[3]-1)/2
     5435 FOR I0=1 TO 4
     5440   LET W[I0+28]=W[I0+8]
     5445   LET W[I0+8]=W[I0+8]-A3*M[I0+3]
     5450 NEXT I0
     5460 LET M=M[1]
     5465 GOSUB 5090
     5467 IF M[8]<>0 THEN GOTO 5490
     5470 LET I[1]=I
     5475 GOSUB 5110
     5480 GOSUB 5045
```

LISTING DES PROGRAMMES P110.BA

```
   5485 LET I[3]=I
-> 5490 PRINT
   5495 PRINT USING L$,H[1,1],H[2,1],H[3,1];
   5500 PRINT USING F$,W[29],W[30],W[31],W[32],PO;
   5505 PRINT USING K$,M[8];
   5510 IF M[8]<>0 THEN GOTO 5530
   5515 PRINT USING M$,I[1];
   5520 PRINT USING N$,I[2];
   5525 PRINT USING M$,I[3];
-> 5530 LET PO=PO+P1
   5535 LET W[9]=W[29]
   5540 IF PO<=360 THEN GOTO 5400
   5545 PRINT
   5550 GOTO 5370
-> 5555 REM CALCULATE Q-SCAN                    CQ
   5560 LET N3=1
   5565 LET N4=0
   5570 GOTO 5600
-> 5575 REM EXECUTE Q-SCAN                      EQ
   5580 LET N3=0
   5585 INPUT "BACKGROUND? YES=1, NO=0: ",N4
   5590 IF N4=0 THEN GOTO 5600
   5595 INPUT "DELTA OMEGA: ",M[13]
-> 5600 INPUT "NUMBER OF SCANS : ",NO
   5602 INPUT "HIGH RESOLUTION? YES=1,NO=0:  ",EO
   5605 LET NO=NO*9
   5610 FOR N1=1 TO NO STEP 9
   5615   PRINT "START-HKL  : ",
   5620   FOR N2=0 TO 2
   5625     INPUT L[N1+N2];
   5630   NEXT N2
   5635   PRINT
   5640   PRINT "DELTA-HKL  : ",
   5645   FOR N2=3 TO 5
   5650     INPUT L[N1+N2];
   5655   NEXT N2
   5660   PRINT
   5665   INPUT "NUMBER OF STEPS: ",L[N1+6]
   5670   PRINT
   5675 NEXT N1
   5680 PRINT
   5685 REM EXECUTE
   5690 FOR N1=1 TO NO STEP 9
   5692   IF EO=0 THEN GOTO 5800
   5695   FOR N2=1 TO 3
   5700     REM PERPENDICULAR POSITION
   5705     LET H[N2,1]=L[N1+N2-1]
   5710   NEXT N2
   5715   GOSUB 3830
```

```
##############################################################################
   DIFF. - CONTR. - PROGR.  P110/ORPHEE                15/ 3/1984 15:  7 SEITE  27
##############################################################################

   LISTING DES PROGRAMMES P110.BA
   ==============================

   5720   LET M[15]=X[1,1]
   5725   LET M[16]=X[2,1]
   5730   LET M[17]=X[3,1]
   5735   FOR N2=1 TO 3
   5740     LET H[N2,1]=H[N2,1]+L[N1+6]*L[N1+N2+2]
   5745   NEXT N2
   5750   GOSUB 3830
   5755   LET M[18]=X[1,1]
   5760   LET M[19]=X[2,1]
   5765   LET M[20]=X[3,1]
   5770   LET X[1,1]=M[16]*M[20]-M[17]*M[19]
   5775   LET X[2,1]=M[17]*M[18]-M[15]*M[20]
   5780   LET X[3,1]=M[15]*M[19]-M[16]*M[18]
   5785   GOSUB 3840
   5790   LET L[N1+7]=W[11]+90
   5795   LET L[N1+8]=W[12]
-> 5800   REM MESSEN
   5801   IF N3=1 THEN GOTO 5805
   5802   LET S1=1
   5803   PRINT USING "##/",SYS(1),SYS(2),SYS(3),SYS(11),SYS(12),SYS(13)
-> 5805   FOR N2=0 TO L[N1+6]
   5808     LET I[N2+1]=0
   5810     LET H[1,1]=L[N1]+L[N1+3]*N2
   5815     LET H[2,1]=L[N1+1]+L[N1+4]*N2
   5820     LET H[3,1]=L[N1+2]+L[N1+5]*N2
   5825     GOSUB 3830
   5827     IF E0=0 THEN GOTO 5850
   5830     GOSUB 5995
   5835     LET W[10]=W[10]-E6
   5837     IF W[10]>180 THEN LET W[10]=W[10]-180
   5840     LET W[11]=L[N1+7]
   5845     LET W[12]=L[N1+8]
-> 5850     IF N3=1 THEN GOTO 5870
   5855     LET M[0]=M[2]
   5860     GOSUB 5090
   5862     IF M[8]<>0 THEN GOTO 5950
   5865     IF N3=0 THEN GOTO 5890
-> 5870     FOR I0=1 TO 4
   5875       LET W[I0]=W[I0+8]
   5880     NEXT I0
   5885     GOTO 5895
-> 5890     GOSUB 3920
-> 5895     GOSUB 3685
   5900     MAT A=INV(D)
   5905     MAT H=A*E
   5910     PRINT USING F$,H[1,1],H[2,1],H[3,1];
   5915     PRINT USING G$,W[1],W[2],W[3],W[4];
   5920     IF N3=1 THEN GOTO 5950
   5925     PRINT USING M$,I[0];
```

```
################################################################################
      DIFF. - CONTR. - PROGR.  P110/ORPHEE                15/ 3/1984 15:  7 SEITE  28
################################################################################

      LISTING DES PROGRAMMES P110.BA
      ==============================

      5927      LET I[N2+1]=I[0]
      5928      IF I[0]<S1 THEN LET S1=I[0]
      5930      IF N4=0 THEN GOTO 5950
      5935      LET W[10]=W[10]+M[13]
      5940      GOSUB 5090
      5945      PRINT USING M$,I[0];
 -> 5950      PRINT
      5955    NEXT N2
      5960    PRINT
      5961    IF N3=1 THEN GOTO 5967
      5962    IF S1<50 THEN LET S1=50
      5963    FOR I0=1 TO N2+1
      5964      PRINT USING N$,I[I0];
      5965      PRINT  TAB(11);"I"; TAB(I[I0]/S1*50+12);"*"
      5966    NEXT I0
 -> 5967    PRINT
      5970    PRINT
      5975 NEXT N1
      5980 PRINT "END OF MEASUREMENT"
      5985 LET N3=0
      5990 GOTO 0160
 => 5995 REM CALCULATE EPSILON
      6000 LET E7=W[12]-L[N1+8]
      6005 IF ABS(ABS(E7)-90)<.0001 THEN GOTO 6045
      6010 IF ABS(ABS(E7)-270)<.0001 THEN GOTO 6045
      6020 LET E6=ATN(TAN(E7*C1)*COS(L[N1+7]*C1))/C1
      6025 IF W[11]<0 THEN LET E6=E6+180
      6030 LET E6=-E6
      6035 RETURN
 -> 6045 LET E6=90*SGN(E7)
      6050 IF W[11]<0 THEN LET E6=E6+180
      6055 PRINT E6
      6060 RETURN
 -> 6065 REM LIST OF SINGLE MEASUREMENTS
      6070 INPUT "NUMBER OF REFLECTIONS TO BE MEASURED (MAX=80):  ",L[0]
      6080 FOR I4=1 TO 3*L[0] STEP 3
      6085   PRINT (I4+2)/3;"REFLECTION :";
      6090   INPUT L[I4],L[I4+1],L[I4+2]
      6095 NEXT I4
      6100 LET N[4]=0
      6105 FOR I4=1 TO 3*L[0] STEP 3
      6110   LET H[1,1]=L[I4]
      6115   LET H[2,1]=L[I4+1]
      6120   LET H[3,1]=L[I4+2]
      6125   GOSUB 2535
      6130 NEXT I4
      6135 PRINT "END OF MEASUREMENT"
      6140 GOTO 0160
 -> 6150 REM INPUT LIST OF ANGLES (E.G. FOR LATER CENTERING)     IA  MA
```

```
DIFF.- CONTR.- PROGR.  P110/ORPHEE                15/ 3/1984 15:  8 SEITE  29

LISTING DES PROGRAMMES P110.BA
==============================

 6155 LET L[0]=0
-> 6160 INPUT L[4*L[0]+1],L[4*L[0]+2],L[4*L[0]+3],L[4*L[0]+4]
 6165 LET L[0]=L[0]+1
-> 6170 IF L[0]<60 THEN GOTO 6160
 6175 GOTO 0160
-> 6200 REM CENTER LIST OF ANGLES                              CA
 6210 INPUT "NO. OF FIRST-,NO. OF LAST ANGLE-SET TO BE CENTERED: ",A6,A7
 6225 IF A6>0 THEN IF A6<=A7 THEN GOTO 6235
 6230 GOTO 6240
-> 6235 IF A7<=L[0] THEN GOTO 6247
-> 6240 PRINT "THERE IS SOMETHING WRONG WITH YOUR INPUT, TYPE LL"
 6245 GOTO 0160
-> 6247 INPUT "MAX. DISCREP.: ",S[4],S[5],S[6]
 6250 FOR I7=4*A6-3 TO 4*A7-3 STEP 4
 6260   FOR I0=1 TO 4
 6270     LET W[8+I0]=L[I7+I0-1]
 6280   NEXT I0
 6290   REM SET POSITION
 6300   GOSUB 4940
 6305   IF M[8]<>0 THEN GOTO 6350
 6306   FOR I0=1 TO 4
 6307     PRINT USING F$,W[I0+8];
 6308   NEXT I0
 6309   PRINT
 6310   GOSUB 5010
 6320   REM CENTER
 6330   GOSUB 4910
 6340   GOSUB 4655
 6342   FOR I0=1 TO 4
 6344     LET L[I7+I0-1]=W[I0+8]
 6346   NEXT I0
-> 6350 NEXT I7
 6360 GOTO 0160
-> 6400 REM CLEAR FOR-NEXT
 6402 ON ERR THEN GOTO 6415
 6405 FOR I0=1 TO 1
 6410 NEXT I0
-> 6415 ON ERR THEN GOTO 6430
 6420 FOR I1=1 TO 1
 6425 NEXT I1
-> 6430 ON ERR THEN GOTO 6445
 6435 FOR I2=1 TO 1
 6440 NEXT I2
-> 6445 ON ERR THEN GOTO 6460
 6450 FOR I3=1 TO 1
 6455 NEXT I3
-> 6460 ON ERR THEN GOTO 6475
 6465 FOR I4=1 TO 1
 6470 NEXT I4
```

```
################################################################################
      DIFF.- CONTR.- PROGR.  P110/ORPHEE                15/ 3/1984 15:  8 SEITE  30
################################################################################

      LISTING DES PROGRAMMES P110.BA
      ==============================

   -> 6475 ON ERR THEN GOTO 6490
      6480 FOR I5=1 TO 1
      6485 NEXT I5
   -> 6490 ON ERR THEN GOTO 6505
      6495 FOR I6=1 TO 1
      6500 NEXT I6
   -> 6505 ON ERR THEN GOTO 6520
      6510 FOR I7=1 TO 1
      6515 NEXT I7
   -> 6520 ON ERR THEN GOTO 6535
      6525 FOR N1=1 TO 1
      6530 NEXT N1
   -> 6535 ON ERR THEN STOP
      6540 FOR N2=1 TO 1
      6545 NEXT N2
      6565 GOTO 0170
   -> 6600 REM INPUT TITLE          TI
      6605 FOR I0=33 TO 73
      6610   LET C$[I0]=" "
      6615 NEXT I0
      6620 INPUT C$[33]
      6625 GOTO 0160
   -> 6700 REM WRITE PARAMETERS ON MAGTAPE     WT
      6705 INPUT "MAG-TAPE-FILE (MT0:N) : ",Z$
      6710 OPEN FILE[0,1],Z$
      6715 WRITE FILE[0],C$[33,LEN(C$)]
      6720 WRITE FILE[0],K[0],W[13],W[14],W[15],W[16]
      6725 WRITE FILE[0],M[52],M[53],M[54],M[55],M[56],M[57]
      6730 MAT WRITE FILE[0],O
      6735 MAT WRITE FILE[0],Q
      6740 WRITE FILE[0],M[1],M[2],M[3],M[4],M[5],M[6],M[7]
      6745 WRITE FILE[0],M[9],M[10],M[11],M[12],M[14],M[22],M[23],M[24]
      6750 WRITE FILE[0],M[21],N[4],N[5]
      6755 IF N[4]=0 THEN GOTO 6775
      6760 FOR I0=6 TO 3*N[4]+5 STEP 3
      6765   WRITE FILE[0],N[I0],N[I0+1],N[I0+2]
      6770 NEXT I0
   -> 6775 WRITE FILE[0],J[0]
      6780 IF J[0]=0 THEN GOTO 6800
      6785 FOR I0=0 TO J[0]-1
      6790   WRITE FILE[0],J[3*I0+1],J[3*I0+2],J[3*I0+3]
      6795 NEXT I0
   -> 6800 CLOSE FILE[0]
      6805 GOTO 0160
   -> 6820 REM READ PARAMETERS FROM MAGTAPE     RT
      6825 INPUT "MAG-TAPE-FILE (MT0:N) : ",Z$
      6830 OPEN FILE[0,3],Z$
      6835 READ FILE[0],C$[33]
      6840 READ FILE[0],K[0],W[13],W[14],W[15],W[16]
```

```
##############################################################################
     DIFF. - CONTR. - PROGR.  P110/ORPHEE                15/ 3/1984 15:  8 SEITE  31
##############################################################################

     LISTING DES PROGRAMMES P110.BA
     ==============================

     6845 READ FILE[0],M[52],M[53],M[54],M[55],M[56],M[57]
     6850 MAT READ FILE[0],O,Q
     6855 READ FILE[0],M[1],M[2],M[3],M[4],M[5],M[6],M[7]
     6860 READ FILE[0],M[9],M[10],M[11],M[12],M[14],M[22],M[23],M[24]
     6865 READ FILE[0],M[21],N[4],N[5]
     6870 IF N[4]=0 THEN GOTO 6890
     6875 FOR I0=6 TO 3*N[4]+5 STEP 3
     6880   READ FILE[0],N[I0],N[I0+1],N[I0+2]
     6885 NEXT I0
  -> 6890 READ FILE[0],J[0]
     6895 IF J[0]=0 THEN GOTO 6915
     6900 FOR I0=0 TO J[0]-1
     6905   READ FILE[0],J[3*I0+1],J[3*I0+2],J[3*I0+3]
     6910 NEXT I0
  -> 6915 CLOSE FILE[0]
     6920 GOTO 0160
  -> 7000 REM PRINT LIST OF ANGLES (INPUT BY IA OR MA OR CENTERED BY CA)  LL
     7005 FOR I0=1 TO L[0]
     7010   PRINT USING L$,I0;
     7015   PRINT USING G$,L[4*I0-3],L[4*I0-2],L[4*I0-1],L[4*I0]
     7020 NEXT I0
     7022 GOTO 0160
  -> 7025 REM DELETE ANGLES FROM LIST L(N) (INPUT BY IA,MA OR CENTERED)  DA
  -> 7030 INPUT A1;
     7035 IF A1>0 THEN IF A1<=L[0] THEN GOTO 7045
     7040 GOTO 0160
  -> 7045 IF A1=L[0] THEN GOTO 7065
     7050 FOR I0=4*A1-3 TO 4*L[0]-4
     7055   LET L[I0]=L[I0+4]
     7060 NEXT I0
  -> 7065 LET L[0]=L[0]-1
     7070 GOTO 7030
  -> 7075 REM TRANSFER ANGLES FROM CA/IA/MA TO IM                TA
     7080 INPUT "NO. OF FIRST-, NO. OF LAST ANGLE-SET: ",A2,A3
     7085 IF J[0]>=20 THEN GOTO 0160
     7090 IF J[0]+A3-A2>19 THEN LET A3=19+A2-J[0]
     7095 IF A2>0 THEN IF A2<=A3 THEN GOTO 7105
  -> 7097 PRINT "NOTHING TRANSFERED; TEST INPUT, LL AND LP"
     7100 GOTO 0160
  -> 7105 IF A3>=A2 THEN IF A3<=L[0] THEN GOTO 7115
     7107 GOTO 7097
  -> 7115 FOR I0=A2 TO A3
     7120   FOR I1=0 TO 3
     7125     LET W[I1+1]=L[4*I0-3+I1]
     7130   NEXT I1
     7135   GOSUB 3685
     7140   FOR I1=1 TO 3
     7145     LET J[3*J[0]+I1]=E[I1,1]
     7150   NEXT I1
```

LISTING DES PROGRAMMES P110.BA

```
   7155   LET J[0]=J[0]+1
   7160 NEXT I0
   7165 PRINT A3-A2+1;" ANGLE-SETS TRANSFERED"
   7170 GOTO 0160
-> 7175 REM ANGLE BETWEEN TWO SETS OF ANGLES FROM LIST L(N)      AA
   7180 LET E0=1
-> 7185 INPUT "ANGLE BETWEEN SET ",A3;
   7187 INPUT " AND SET ",A4;
   7188 PRINT " = ";
   7190 IF A3>0 THEN IF A3<=L[0] THEN GOTO 7200
   7192 PRINT "FIRST INPUT IS WRONG"
   7195 GOTO 0160
-> 7200 IF A4>0 THEN IF A4<=L[0] THEN GOTO 7210
   7202 PRINT "SECOND INPUT IS WRONG"
   7205 GOTO 0160
-> 7210 FOR I0=0 TO 3
   7215   LET W[I0+1]=L[4*A3-3+I0]
   7220 NEXT I0
   7225 GOSUB 3685
   7230 MAT F=E
   7235 FOR I0=0 TO 3
   7240   LET W[I0+1]=L[4*A4-3+I0]
   7245 NEXT I0
   7250 GOSUB 3685
   7255 GOSUB 2035
   7260 GOTO 7185
-> 7265 REM ANGLE BETWEEN TWO REFLECTIONS HKL(1) AND HKL(2)     AH
-> 7270 INPUT "ANGLE BETWEEN HKL(1): ",H[1,1],H[2,1],H[3,1];
   7275 MAT F=0*H
   7280 INPUT " AND HKL(2): ",H[1,1],H[2,1],H[3,1];
   7282 PRINT " = ";
   7285 MAT E=0*H
   7290 LET E0=1
   7295 GOSUB 2035
   7300 GOTO 7270
```

GOTO KREUZREFERENZLISTE DES PROGRAMMES P110.BA

0160	:	0085 0163 0265 0285 0305 0340 0355 0370 0380
		0390 0400 0410 0445 0475 0490 0505 0520 0540
		0555 0580 0595 0645 0660 0710 0870 0930 0990
		1020 1170 1385 1400 1405 1695 1745 1840 1935
		1970 2310 2350 2370 2385 2405 2420 2775 2795
		2905 3215 3330 3385 5175 5200 5990 6140 6175
		6245 6360 6625 6805 6920 7022 7040 7085 7100
		7170 7195 7205
0170	:	0205 6565
0200	:	0240
0207	:	0245
0210	:	0190
0270	:	0215
0290	:	0215
0310	:	0215
0345	:	0215
0360	:	0215
0375	:	0215
0385	:	0215
0395	:	0215
0405	:	0220
0415	:	0220
0450	:	0220
0465	:	0220
0480	:	0220
0495	:	0220
0510	:	0220
0530	:	0220
0545	:	0225
0585	:	0225
0600	:	0225
0650	:	0260
0665	:	0225
0675	:	0750
0715	:	0225
0755	:	0225
0875	:	0230
0885	:	0230 0900
0905	:	0230
0935	:	0230
0945	:	0230 0985
0995	:	0230
1025	:	0230
1080	:	1095
1185	:	1250
1245	:	1285
1330	:	0230
1390	:	0235
1395	:	1435

GOTO KREUZREFERENZLISTE DES PROGRAMMES P110.BA

1430	:	1410			
1440	:	0235			
1450	:	0260			
1455	:	1500			
1505	:	0240			
1685	:	1650			
1700	:	0260			
1750	:	0235			
1790	:	1880			
1845	:	0235			
1885	:	0235			
1900	:	0235			
1915	:	1895			
1940	:	0235			
1975	:	0235			
1980	:	2000			
2005	:	0240			
2010	:	2090			
2095	:	0240			
2100	:	2115			
2205	:	0240			
2210	:	2235			
2240	:	0240			
2245	:	2275			
2280	:	0240			
2315	:	0245			
2355	:	0250			
2375	:	0250			
2390	:	0250			
2410	:	0250			
2415	:	2470			
2425	:	0250			
2475	:	0250			
2525	:	2500			
2540	:	2665	2690	2715	2740
2570	:	2560			
2580	:	2560			
2590	:	2560			
2600	:	2560			
2610	:	2560			
2620	:	2560			
2625	:	2585	2595	2605	2615
2630	:	2565			
2635	:	2638			
2645	:	2550	2555	2575	2625
2655	:	0250			
2670	:	2645			
2685	:	2675	2755		
2710	:	2675			

```
##############################################################################
      DIFF. - CONTR. - PROGR.  P110/ORPHEE                15/ 3/1984 15:  9 SEITE  35
##############################################################################

      GOTO KREUZREFERENZLISTE DES PROGRAMMES P110.BA
      ==============================================

       2735  :   2675
       2760  :   2705  2730
       2780  :   0250
       2800  :   0255
       2825  :   3010
       2830  :   2820
       2910  :   2860
       2925  :   2865
       2940  :   2870
       2955  :   2875
       2970  :   2880
       2985  :   2885
       2995  :   2920  2935  2950  2965  2980
       3105  :   0255
       3115  :   0255
       3206  :   3201
       3210  :   3172  3182
       3220  :   0255
       3260  :   3325
       3269  :   3315
       3275  :   3301  3305
       3300  :   3345
       3301  :   3365
       3306  :   3302
       3335  :   3285
       3350  :   3290
       3370  :   0245  0260
       3820  :   3800
       3895  :   3865
       3910  :   3875
       4115  :   4165
       4280  :   4255
       4470  :   4227  4228  4229  4230  4235  4240
       4630  :   4561  4562
       4637  :   4330  4631
       4645  :   4500
       4731  :   4726  4727
       4743  :   4677
       4745  :   4730
       4760  :   4754
       4842  :   4807
       4845  :   4841
       4869  :   4865
       4874  :   4870
       4879  :   4863  4864  4875
       4887  :   4889
       4896  :   4897
       4900  :   4901
       4990  :   4970  4972  4974  4976  4978  4980
```

GOTO KREUZREFERENZLISTE DES PROGRAMMES P110.BA

5000	:	4985		
5005	:	4995		
5020	:	5025		
5060	:	5065		
5125	:	5130		
5155	:	4890	5070	5135
5180	:	0260		
5310	:	5295		
5315	:	5305		
5355	:	0260		
5370	:	0260	5550	
5400	:	5540		
5490	:	5467		
5530	:	5510		
5555	:	0225		
5575	:	0225		
5600	:	5570	5590	
5800	:	5692		
5805	:	5801		
5850	:	5827		
5870	:	5850		
5890	:	5865		
5895	:	5885		
5950	:	5862	5920	5930
5967	:	5961		
6045	:	6005	6010	
6065	:	2495		
6150	:	0255		
6160	:	6170		
6170	:	0260		
6200	:	0240		
6235	:	6225		
6240	:	6230		
6247	:	6235		
6350	:	6305		
6400	:	0167		
6415	:	6402		
6430	:	6415		
6445	:	6430		
6460	:	6445		
6475	:	6460		
6490	:	6475		
6505	:	6490		
6520	:	6505		
6535	:	6520		
6600	:	0245		
6700	:	0245		
6775	:	6755		
6800	:	6780		

GOTO KREUZREFERENZLISTE DES PROGRAMMES P110.BA

6820	:	0245
6890	:	6870
6915	:	6895
7000	:	0245
7025	:	0245
7030	:	7070
7045	:	7035
7065	:	7045
7075	:	0255
7097	:	7107
7105	:	7095
7115	:	7105
7175	:	0255
7185	:	7260
7200	:	7190
7210	:	7200
7265	:	0255
7270	:	7300

GOSUB KREUZREFERENZLISTE DES PROGRAMMES P110.BA

1175	:	1110								
1215	:	1110								
1255	:	1110								
1290	:	1110	1110	1110						
1750	:	1575								
1770	:	2845								
1885	:	1550								
2035	:	7255	7295							
2475	:	1720								
2535	:	6125								
3390	:	0670	0720							
3515	:	0795	3715	5225						
3580	:	3525	3560	5235						
3610	:	0830	0845							
3685	:	0890	0950	2025	2215	2250	2290	2325	3200	5895
		7135	7225	7250						
3725	:	0895	1495	3209						
3770	:	0880	1445	3110						
3795	:	1795	1810	1825	2080					
3830	:	2105	2265	2340	3165	5375	5715	5750	5825	
3840	:	4205	5785							
3920	:	2285	2320	5890						
3950	:	2415	2445							
4090	:	2530	2640							
4195	:	2635	4155							
4551	:	1509	4074							
4655	:	2790	3180	6340						
4750	:	4685	4700	4715						
4880	:	2395	3925	4915						
4910	:	2380	2785	6330						
4940	:	2360	3170	5095	6300					
5010	:	2365	3175	5097	6310					
5045	:	5100	5480							
5090	:	3280	4005	4335	4370	4415	4721	4805	5465	5860
		5940								
5110	:	5475								
5205	:	4208	5190							
5225	:	5400								
5995	:	5830								

VARIABLEN KREUZREFERENZLISTE DES PROGRAMMES P110.BA

A	:	0015	0320	0325	0330	0334	0335	0338	0825	0835	0840
		0850	0855	0865	0915	0925	1155	1225	1230	1235	1265
		1270	1275	1335	1360	1450	1475	1755	1760	1850	1855
		1905	1910	2220	2225	2255	2260	2295	2300	2330	2335
		2810	2815	2825	2830	2890	2895	2900	3000	3005	3410
		3445	3450	3455	3460	3465	3470	3475	3485	3495	3500
		3505	3550	3565	3640	3645	3650	3655	3665	5240	5280
		5900	5905								
A0	:	0275	0280	0455	0460	0465	0470	0730	0740	1045	1130
		1135	1140	1155	1320	1790	1805	1820	1960	1965	1980
		1985	2035	2055	2075	2545	2550	2555	3430	3435	3520
		3555	3585	3595	3655	3665	3690	3695	3700	3705	3800
		3805	3840	3845	3850	4140	4145	4150	4260	4525	4530
		5230	5320	5325	5330						
A1	:	1050	1180	1185	1220	1260	1295	1395	1400	1405	1410
		1415	1455	1465	1800	1815	1830	1945	1960	1980	1985
		2040	2060	2075	2085	2480	2485	3695	3700	3705	3805
		3810	3820	3860	3865	3870	5325	5335	5340	5345	7030
		7035	7045	7050							
A2	:	1070	1085	1100	1105	1180	1185	1220	1260	1295	1950
		1960	1985	1990	1995	2045	2065	2075	2480	2490	4260
		4265	5330	5340	7080	7090	7095	7105	7115	7165	
A3	:	1130	1200	1955	1960	3955	3965	4025	4079	4265	4270
		4285	4295	4755	4771	4780	4820	4850	4867	5430	5445
		7080	7090	7095	7105	7115	7165	7185	7190	7215	
A4	:	1130	1205	2570	2575	2580	2590	2600	2610	2620	2625
		3975	4756	4772	4781	4821	4851	4872	7187	7200	7240
A5	:	1225	1240	1245	1265	1280	1300	1305	1310	4757	4773
		4782	4822	4852	4877						
A6	:	1230	1240	1270	1280	4392	4632	4635	6210	6225	6250
A7	:	1235	1240	1275	1280	4342	4377	4422	5048	5072	6210
		6225	6235	6250							
B	:	0015	0325	0330	0335	0336	0338	0339	0910	0915	1760
		1765	1775	1790	1805	1820	1855	1865	1890	1910	1915
		1920	1925	2840	2855	2915	2930	2945	2960	2975	2990
		3005	3565	3570	5240	5245	5250	5255	5260	5265	5270
		5275	5280								
B0	:	3250	3285	3340							
B1	:	2630	4130	4145	4150	4245	4495	4585			
B2	:	2535	2640	4170	4638						
B3	:	4225	4250	4500							
B5	:	2670	2700	2705	2725	2730	2750	2755			
C	:	0015	0805	0825	0835	0855	0910	3740	3775	5270	5275
		5280	5285	5290	5295	5310	5325	5330			
C0	:	0110	0185								
C1	:	0115	1985	2485	2490	3310	3435	3530	3540	3585	3595
		3690	3805	3850	3870	3880	5250	5260	5290	5310	5320
		5340	6020								
D	:	0015	0810	0840	0850	0855	0915	3745	3780		

```
################################################################################
#       DIFF. - CONTR. - PROGR.  P110/ORPHEE                15/ 3/1984 15:11 SEITE  40
################################################################################
```

VARIABLEN KREUZREFERENZLISTE DES PROGRAMMES P110.BA

E	:	0020	0765	0770	0810	0960	0980	1040	1135	1140	1150
		1155	1315	1350	1360	1370	1465	1475	1775	1780	1790
		1805	1820	1865	1870	2015	2055	2065	2225	2260	2300
		2335	3207	3570	3745	3750	5905	7145	7230	7285	
E0	:	0164	1507	1580	1705	1740	1835	1930	2087	2765	2835
		2850	4073	4076	4330	4560	5602	5692	5827	7180	7290
E1	:	1710	1735								
E6	:	5835	6020	6025	6030	6045	6050	6055			
E7	:	6000	6005	6010	6020	6045					
F	:	0020	0770	0775	0805	1080	1085	1105	1190	1310	1315
		2015	2055	2060	7230	7275					
G	:	0020	0775	0780	0785	1105	1195	1225	1230	1235	1280
		1300	3570	3700	3705	3710					
H	:	0020	0885	1190	1360	1375	1475	1485	2100	2225	2230
		2260	2300	2305	2335	2510	2515	2520	2525	2540	2570
		2580	2590	2600	2610	2620	2660	2685	2690	2695	2710
		2715	2720	2735	2740	2745	3150	3155	3740	3745	3835
		4095	4100	4105	4120	4135	4175	4180	4185	4485	4575
		5370	5495	5705	5740	5810	5815	5820	5905	5910	6110
		6115	6120	7270	7275	7280	7285				
I	:	0025	3290	3295	3335	3355	4010	4013	4015	4020	4025
		4063	4064	4067	4070	4340	4342	4375	4377	4380	4385
		4420	4422	4430	4525	4545	4547	4610	4612	4620	4634
		4635	4723	4810	4815	4820	4821	4822	4845	4850	4851
		4852	4863	4864	4867	4872	4877	5080	5145	5470	5485
		5515	5520	5525	5808	5925	5927	5928	5945	5964	5965
I0	:	0185	0190	0195	0215	0220	0225	0230	0235	0240	0245
		0250	0255	0260	0565	0570	0575	0615	0625	0725	0730
		0735	0740	0745	0760	0805	0810	0820	0955	0960	0965
		1000	1005	1010	1015	1035	1110	1150	1155	1165	1340
		1350	1365	1380	1415	1420	1425	1460	1465	1470	1480
		1485	1490	1665	1675	1680	1770	1775	1780	1785	1860
		1865	1870	1875	2010	2030	2050	2055	2060	2065	2070
		2430	2435	2440	3120	3125	3130	3230	3235	3240	3395
		3400	3405	3410	3420	3425	3435	3440	3480	3485	3490
		3730	3740	3745	3750	3760	3930	3935	3940	3960	3965
		3970	4115	4120	4125	4210	4215	4220	4290	4295	4300
		4520	4525	4535	4605	4610	4612	4615	4633	4634	4635
		4636	4660	4665	4670	4671	4672	4673	4760	4765	4770
		4860	4861	4862	4898	4900	4901	4902	4904	4920	4925
		4930	4945	4950	4952	4955	4958	4960	5435	5440	5445
		5450	5870	5875	5880	5963	5964	5965	5966	6260	6270
		6280	6306	6307	6308	6342	6344	6346	6405	6410	6605
		6610	6615	6760	6765	6770	6785	6790	6795	6875	6880
		6885	6900	6905	6910	7005	7010	7015	7020	7050	7055
		7060	7115	7125	7160	7210	7215	7220	7235	7240	7245
I1	:	0800	0805	0810	0815	1055	1110	1125	1145	1150	1155
		1160	1345	1350	1355	3145	3150	3155	3160	3185	3190
		3195	3202	3203	3204	3206	3207	3208	3405	3410	3415

VARIABLEN KREUZREFERENZLISTE DES PROGRAMMES P110.BA

		3620	3625	3630	3640	3645	3650	3735	3740	3745	3750
		3755	4045	4050	4055	4355	4360	4365	4395	4400	4405
		4825	4830	4835	6420	6425	7120	7125	7130	7140	7145
		7150									
I2	:	1060	1065	1080	1120	1200	3630	3635	3640	3645	3650
		3980	4000	4062	4067	4315	4350	4420	4422	4430	4515
		4520	4547	4605	4620	4633	4780	4781	4782	4800	4845
		4863	4864	4866	4871	4876	6435	6440			
I3	:	1065	1080	1115	1205	3135	3150	3207	3210	3615	3620
		3640	3645	3650	3655	3665	3675	4000	4010	4014	4025
		4058	4062	4063	4064	4065	4078	4079	4080	4081	4350
		4375	4377	4390	4515	4520	6450	6455			
I4	:	1075	1080	1085	1090	1095	3660	3665	3670	4675	4726
		4731	4754	6080	6085	6090	6095	6105	6110	6115	6120
		6130	6465	6470							
I5	:	4800	4810	4820	4821	4822	4840	4842	4843	6480	6485
I6	:	4866	4867	4868	4871	4872	4873	4876	4877	4878	6495
		6500									
I7	:	6250	6270	6344	6350	6510	6515				
J	:	0025	0940	0960	0970	0975	0985	1000	1010	1060	1065
		1080	1340	1350	1405	1410	1415	1420	1430	1465	3115
		3120	3125	3135	3150	3207	3225	6775	6780	6785	6790
		6890	6895	6900	6905	7085	7090	7145	7155		
J0	:	0090	4887	4889	5060	5065	5125	5130			
J1	:	0095	4887	4890	5020	5025	5060	5070	5125	5135	5160
K	:	0025	0280	0680	0685	0690	0695	0700	0705	0730	0735
		0740	0775	1515	1985	2545	3400	3410	3435	3445	3455
		3465	3485	3495	3500	3505	3695	3840	4140	6720	6840
L	:	0030	0100	3201	3203	3205	5625	5650	5665	5705	5740
		5790	5795	5805	5810	5815	5820	5840	5845	6000	6020
		6070	6080	6090	6105	6110	6115	6120	6155	6160	6165
		6170	6235	6270	6344	7005	7015	7035	7045	7050	7055
		7065	7105	7125	7190	7200	7215	7240			
M	:	0025	0120	0460	0470	0485	0500	0515	0535	0590	1535
		1595	1610	1620	1630	1690	1692	1710	1715	1730	1735
		2480	2481	2485	2490	2495	2500	2505	2510	2515	2520
		2525	2550	2555	2560	2632	2637	2638	2645	2650	2675
		2690	2695	2715	2720	2740	2745	3172	3182	3235	3255
		3265	3270	3271	3275	3300	3301	3302	3305	3306	3310
		3315	3320	3325	3360	3955	3965	3980	3995	4050	4070
		4071	4079	4082	4145	4150	4227	4228	4229	4230	4235
		4240	4255	4265	4270	4275	4280	4285	4295	4315	4325
		4345	4360	4400	4410	4435	4445	4450	4460	4465	4480
		4505	4510	4561	4562	4570	4590	4595	4600	4631	4637
		4680	4687	4695	4702	4710	4717	4755	4756	4757	4795
		4807	4950	4967	4970	4972	4974	4976	4978	4980	4990
		5012	5047	5050	5112	5115	5430	5445	5460	5467	5505
		5510	5595	5720	5725	5730	5755	5760	5765	5770	5775
		5780	5855	5862	5935	6305	6725	6740	6745	6750	6845

```
################################################################################
      DIFF. - CONTR. - PROGR.  P110/ORPHEE                15/ 3/1984 15:12 SEITE  42
################################################################################
```

VARIABLEN KREUZREFERENZLISTE DES PROGRAMMES P110.BA

		6855	6860	6865						
N	:	0025	0550	0555	0560	0565	0570	1645	1650	1660	1665
		1675	2530	2640	4095	4100	4105	4110	4120	4160	4165
		4175	4180	4185	6100	6750	6755	6760	6765	6865	6870
		6875	6880								
N0	:	5600	5605	5610	5690						
N1	:	5610	5625	5650	5665	5675	5690	5705	5740	5790	5795
		5805	5810	5815	5820	5840	5845	5975	6000	6020	6525
		6530									
N2	:	5620	5625	5630	5645	5650	5655	5695	5705	5710	5735
		5740	5745	5805	5808	5810	5815	5820	5927	5955	5963
		6540	6545								
N3	:	5560	5580	5801	5850	5865	5920	5961	5985		
N4	:	5565	5585	5590	5930						
O	:	0015	0295	0300	0315	0330	0334	0350	0860	0865	0920
		0925	1030	1150	1335	1450	1453	1755	1760	1850	1855
		1890	1905	1910	1945	1950	1955	1960	2220	2255	2295
		2330	2540	2805	2810	2830	2840	2860	2865	2870	2875
		2880	2885	2895	2915	2930	2945	2960	2975	2990	3835
		4135	5900	6730	6850	7275	7285				
P	:	0015	0675	0680	0685	0690	0695	0700	0705	0770	0865
P0	:	2632	2637	2638	4152	4207	4490	4580	5185	5250	5260
		5395	5500	5530	5540						
P1	:	5365	5530								
Q	:	0015	0295	0315	0350	0860	0920	1030	1453	2805	6735
		6850									
R	:	0015	3750	3785							
S	:	0030	2782	3117	4672	4677	4722	4727	4856	4857	4858
		6247									
S0	:	3985	4020	4069	4070	4077	4305	4380	4445	4450	4546
		4620	4785	4815	4850	4851	4852	4855			
S1	:	3990	4025	4077	4310	4385	4392	4440	4525	4790	4820
		4821	4822	4855	5802	5928	5962	5965			
S2	:	3992	4015	4061	4064	4077	4079	4430	4435	4855	4856
		4857	4858	4861							
S3	:	4435	4440	4445	4450						
S4	:	4445	4450	4460	4548	4620					
S5	:	4450	4455	4465	4548	4620					
S6	:	4460	4550	4625							
S7	:	4465	4550	4625							
U	:	0020	2815	2825	2830	2890	3000	3005			
W	:	0025	0365	0375	0385	0395	0405	0420	0790	0885	0945
		1525	2020	2110	2210	2245	2270	2345	2400	2435	2450
		2455	2460	2465	2787	3173	3190	3203	3255	3260	3265
		3270	3271	3300	3301	3305	3310	3315	3320	3325	3350
		3360	3520	3530	3540	3555	3690	3850	3855	3870	3880
		3885	3887	3895	3900	3910	3935	3965	4050	4079	4080
		4215	4227	4228	4229	4230	4235	4240	4295	4360	4400
		4490	4580	4665	4680	4690	4695	4705	4710	4720	4724

```
################################################################################
      DIFF. - CONTR. - PROGR.  P110/ORPHEE                15/ 3/1984 15:12 SEITE  43
################################################################################

      VARIABLEN KREUZREFERENZLISTE DES PROGRAMMES P110.BA
      ===================================================

                4728  4743  4755  4756  4757  4765  4771  4772  4773  4780
                4781  4782  4820  4821  4822  4830  4850  4851  4852  4856
                4857  4858  4861  4865  4870  4875  4892  4894  4896  4897
                4900  4901  4902  4925  4950  4952  4955  4958  4970  4972
                4974  4976  4978  4980  4982  4983  4993  5000  5195  5207
                5210  5215  5220  5230  5290  5300  5310  5315  5320  5322
                5323  5340  5345  5347  5348  5380  5385  5390  5440  5445
                5500  5535  5790  5795  5835  5837  5840  5845  5875  5915
                5935  6000  6025  6050  6270  6307  6344  6720  6840  7125
                7215  7240
X         :     0020  0125  1195  1300  2540  2545  3835  3840  3860  3870
                3875  3880  3885  3895  3910  4135  4140  5720  5725  5730
                5755  5760  5765  5770  5775  5780
Y         :     0020  0130  0135  3530  3535  3540  3545  3550
Z         :     0020  0140  0145  3550  3565  3585  3590  3595  3600  5240
                5270
A$        :     0005  0070  0110  0190
B$        :     0005  0170  0190  0210
C$        :     0030  0080  1506  4530  6610  6620  6715  6835
F$        :     0005  0075  1375  2230  2305  2787  3173  3350  4490  4580
                4722  4724  4728  4743  5500  5910  6307
G$        :     0005  0075  1800  1815  1830  2085  2110  2270  2345  4080
                4082  5195  5915  7015
H$        :     0005  0075  1965  2400  4550  4625  4993
I$        :     0005  0075  1515  1525  1595  1620  1630  1780  1995  4600
J$        :     0005  0075  0980  1010  1370  1870  1915  1920  1925  1990
K$        :     0010  0075  4495  4585  5505
L$        :     0010  0075  0975  1005  1130  1365  3155  4485  4505  4575
                5495  7010
M$        :     0010  0075  1730  3355  4480  4570  4590  4612  4723  5515
                5525  5925  5945
N$        :     0010  0075  1535  1610  1645  1660  1675  1690  4013  4063
                4546  4548  4610  4620  4634  5520  5964
X$        :     0010  0630  0657  1691  4565
Y$        :     0010  0610  0620  0640
Z$        :     0010  0605  0635  0658  1691  6705  6710  6825  6830
```

GOSUB LISTE DES PROGRAMMES P110.BA

```
 1175  :  FIRST VECTOR
 1215  :  SECOND VECTOR
 1255  :  THIRD VECTOR
 1290  :  IDENTICAL VECTORS
 1750  :  PRINT CELL CONSTANTS   PC
 1770  :  ____________________________________________________________
 1885  :  PRINT ORIENTING MATRIX   PM
 2035  :  ____________________________________________________________
 2475  :  COLLECT DATA   CD
 2535  :  ____________________________________________________________
 3390  :  CALCULATE RECIPROCAL CELL CONSTANTS
 3515  :  SETUP ROTATION MATRIX
 3580  :  Z ROTATION MATRIX
 3610  :  ORTHOGONAL SYSTEM
 3685  :  ORTHOGONAL COORDINATES FROM ANGLES
 3725  :  SUMMATIONS FOR LSQ
 3770  :  CLEAR MATRICES
 3795  :  ARCCOS
 3830  :  CALCULATE XYZ + ANGLES
 3840  :  ____________________________________________________________
 3920  :  TRANSFER CURRENT POSITION
 3950  :  SR STEPSCAN
 4090  :  MEASURE STANDARDS
 4195  :  MEASURE ONE REFLEXION
 4551  :  ____________________________________________________________
```

```
##############################################################################
     DIFF. - CONTR. - PROGR.  P110/ORPHEE                15/ 3/1984 15:13 SEITE  45
##############################################################################

     GOSUB LISTE DES PROGRAMMES P110.BA
     ==================================

      4655  :  SEARCH MAXIMUM

      4750  :  PROFILE FOR MAXIMUM

      4880  :  READ DIGITIZERS AND CONVERT TO REAL POSITION

      4910  :  SR LOAD POSITION

      4940  :  LOAD POSITIONS AND STEPS

      5010  :  SET POSITION

      5045  :  MEASURE ONE POINT

      5090  :  GO AND MEASURE

      5110  :  MEASURE INTEGRAL

      5205  :  PSI ROTATION

      5225  :  ____________________________________________________________

      5995  :  CALCULATE EPSILON
```

APPENDIX II:

TV-Program (BASIC)

Contents:

TV.BA
LISTING.....:0001
GOTO KREUZREFERENZLISTE.....:0003
VARIABLEN KREUZREFERENZLISTE.....:0003

```
##############################################################################
   TV-PROGRAMM   P110/ORPHEE                          15/ 3/1984 15:16 SEITE   1
##############################################################################

   LISTING DES PROGRAMMES TV.BA
   ============================

   0010 REM  PROGRAM FOR FEATURING PROFILES OF MEASURED
   0020 REM  REFLECTONS ON TV
   0030 REM  REFLECTIONS ARE ON MAG-TAPE
   0040 LET N9=256
   0050 REM*****************************************************
   0060 CLOSE
   0066 CALL 208
   0070 CALL 139
   0080 DIM X[N9],Y[N9],Z[2047],A$[12],B$[12],C$[12],D$[40]
   0090 DIM X$[132],Y$[132],Z$[132]
   0100 DATA 0,0,0,0,0,0,0,0,0,0,0,0,0,0,0,0,0,0,0,0,0
   0110 READ A,N,Y0,I0,Y9,I9,S
   0120 REM
   0130 REM SWITCH ON TV
   0140 CALL 31,1,0,0
   0150 LET Z=0
   0160 CALL 30,Z,A
   0170 CALL 38
   0180 OPEN FILE[1,1],"$LPT"
   0190 FOR K=0 TO 1000
   0200 NEXT K
   0210 CALL 130,1
   0220 CALL 138
   0240 REM  OPEN MAG-TAPE-FILE
   0250 INPUT "DATA - FILE  (MT0:0 -> MT0:99) : ",A$
   0260 OPEN FILE[0,3],A$
   0270 INPUT FILE[0],Z$
   0280 REM
-> 0290 PRINT FILE[1],Z$[1,36]
   0310 REM  READ MAGTAPE-DATA
   0320 LET N=0
   0330 INPUT FILE[0],A$
   0333 IF EOF(0) THEN STOP
   0340 INPUT FILE[0],D$
   0350 INPUT FILE[0],K5
   0355 PRINT FILE[1],"NUMBER:  ";K5,
   0360 REM HKL EINLESEN
   0370 INPUT FILE[0],A$
   0380 PRINT FILE[1],"HKL:  ";A$
   0390 REM READ 2TETA OMEGA CHI FI
   0400 INPUT FILE[0],B$
   0410 PRINT FILE[1],"2-THETA     OMEGA :      ";B$
   0420 REM INDEX
   0430 INPUT FILE[0],K7
   0450 REM NUMBER OF STEPS
   0460 INPUT FILE[0],N9
   0470 REM DETA-2TETA DELTA-OMEGA
   0480 INPUT FILE[0],C$
   0490 PRINT FILE[1],"DEL-2-THETA DEL-OMEGA:  ";C$
```

```
##########################################################################
*      TV-PROGRAMM   P110/ORPHEE                    15/ 3/1984 15:17 SEITE   2
##########################################################################
```

LISTING DES PROGRAMMES TV.BA
==========

```
0495 INPUT FILE[0],C$
0500 REM BACKGROUND 1
0510 INPUT FILE[0],U1
0515 INPUT FILE[0],T0
0520 LET Y[0]=U1
0530 FOR K=1 TO N9
0540   INPUT FILE[0],Y[K]
0545   INPUT FILE[0],T1
0547   LET T0=T0+T1
0550 NEXT K
0560 INPUT FILE[0],U2
0565 INPUT FILE[0],T1
0567 LET T0=T0+T1
0570 LET Y[N9+1]=U2
0571 LET N9=N9+2
0573 PRINT FILE[1],"MEAS.-TIME IN SEC: ";T0/10
0574 PRINT FILE[1],"MEAS.-DATE:    ";D$[1,8];"   ";D$[10,17]
0580 INPUT FILE[0],D$
0585 PRINT FILE[1],"I(CORR)  SIGMA:    ";D$[LEN(D$)-15]
0590 INPUT FILE[0],A$
0600 REM
0610 REM FEATURING
0620 REM
0630 LET N=N9
0640 REM
0650 REM CALCULATE  MAXIMUM-MINIMUM
0660 LET Y9=0
0664 FOR K=1 TO N9
0666   IF Y[K]>Y9 THEN LET Y9=Y[K]
0668 NEXT K
0670 REM Y9 ROUNDING   2^N-1
0675 IF Y9<150 THEN LET Y9=150
0680 REM
0690 REM  PLOT ROUTINE
0700 LET X[0]=0
0710 CALL 233,0,-1,-1
0720 CALL 33,X,Y,-N,0,0,N-1,Y9,A
0723 ON ERR THEN GOTO 0740
0725 CALL 103
-> 0730 GOTO 0730
-> 0740 CALL 138
0745 ON ERR THEN STOP
0750 GOTO 0290
```

GOTO KREUZREFERENZLISTE DES PROGRAMMES TV.BA

0290	:	0750
0730	:	0730
0740	:	0723

VARIABLEN KREUZREFERENZLISTE DES PROGRAMMES TV.BA

A	:	0110	0160	0720				
I0	:	0110						
I9	:	0110						
K	:	0190	0200	0530	0540	0550	0664	0666	0668
K5	:	0350	0355						
K7	:	0430							
N	:	0110	0320	0630	0720				
N9	:	0040	0080	0460	0530	0570	0571	0630	0664
S	:	0110							
T0	:	0515	0547	0567	0573				
T1	:	0545	0547	0565	0567				
U1	:	0510	0520						
U2	:	0560	0570						
X	:	0080	0700	0720					
Y	:	0080	0520	0540	0570	0666	0720		
Y0	:	0110							
Y9	:	0110	0660	0666	0675	0720			
Z	:	0080	0150	0160					
A$	:	0080	0250	0260	0330	0370	0380	0590	
B$	:	0080	0400	0410					
C$	:	0080	0480	0490	0495				
D$	:	0080	0340	0574	0580	0585			
X$	:	0090							
Y$	:	0090							
Z$	:	0090	0270	0290					

Appendix III: CALL-ROUTINES

```
                        .TITL   DICP110
                        .RB SOSBASIC:DICP110.RB
                    ;
                    ;DIFFRACTOMETER CONTROL PROGRAM
                    ;
                    ;
                    ;DEVICE CONTROL TABLE
                    ;
                        .NREL
          000401        NOP=401
                        .ENT    .U02D

                    .ENT DICIN DICRS DICMA DICAU DICIS DICRI DICTD DICRD
                    .ENT DICLP DICDR DICMO DICMI DICFI DICWO DICRC

                    A:
00000'000045 .U02D: 45                  ;0 DEVICE CODE
00001'177777        -1                  ;1 IT-MASK OF LOWER PR.DEV.+DIFF.
00002'000000        0                   ;2 IT-MASK ACTIVE
00003'000000        0                   ;3 LINK
00004'000047'       INTER               ;4 INTERRUPT ROUTINE
00005'000000        0                   ;5 INTERRUPT FRAME LINKS
00006'000033'       DCTDT               ;6 DEVICE DISPATCH TABLE
00007'000037'       DCTST               ;7 DEVICE START ROUTINE
00010'000043'       DCTSP               ;10   "    STOP     "
00011'000013        .BLK 13
00024'000007        .BLK 7              ;24-32 INTERRUPT FRAME
                    ;DEVICE DISPATCH TABLE (DUMMY)
00033'177777 DCTDT: -1
00034'177777        -1
00035'177777        -1
00036'177777        -1
                    ;DEVICE START ROUTINE (DUMMY)
00037'000401 DCTST: NOP
00040'001400        JMP 0 3
00041'000401        NOP
00042'000401        NOP
                    ;DEVICE STOP ROUTINE (DUMMY)
00043'060245 DCTSP: NIOC 45
00044'001400        JMP 0 3
00045'000401        NOP
00046'000401        NOP
                    ;
                    ;
                    ;INTERRUPT ROUTINE
                    ;
                        .EXTN   .DISM
00047'020466 INTER: LDA 0 ENINR     ;ENABLE INTERRUPT REGISTER
00050'061045        DOA 0 45
00051'064445        DIA 1 45        ;READ INTERRUPT REGISTER
00052'044464        STA 1 IWORD     ;STORE IT
00053'010464        ISZ IFLG        ;SET FLAG
00054'060345        NIOP 45         ;DISABLE INTERRUPT REGISTER
00055'020464        LDA 0 DISIN
```

```
00056'061045            DOA 0 45          ;DISABLE INTERRUPTS
00057'002401            JMP @.+1          ;RETURN
00060'077777            .DISM
                ;
                ;CALL 70:   INITIALIZE
                ;
00061'020461 DICIN:     LDA 0 INTON       ;ENABLE DIFFRACTOMETER INTERRUPTS
00062'061045            DOA 0 45
00063'102400            SUB 0 0
00064'040453            STA 0 IFLG        ;CLEAR INTERRUPT FLAG
00065'040451            STA 0 IWORD       ;CLEAR INTERRUPT WORD
00066'001000            JMP 0 2
                ;
                ;CALL 71:  IO - RESET
                ;
00067'062677 DICRS:     IORST             ;IO - RESET
00070'020403            LDA 0 RTCFREQ
00071'061114            DOAS 0 RTC        ;RESTART THE CLOCK
00072'001000            JMP 0 2

00073'000001 RTCFREQ:           1
                ;
                ;CALL 171:SET MANUAL OPERATION
                ;
00074'020403 DICMA:     LDA 0 OPMAN
00075'061045            DOA 0 45
00076'001000            JMP 0 2
00077'042000 OPMAN:     1B1+1B5
                ;
                ;CALL 172:SET AUTOMATIC OPERATION
                ;
00100'020403 DICAU:     LDA 0 OPAUT
00101'061045            DOA 0 45
00102'001000            JMP 0 2
00103'044000 OPAUT:     1B1+1B4
                ;
                ;CALL 173,I,J
                ;READ INTERRUPT FLAG I AND INTERRUPT WORD J
                ;
                        .EXTD   .FLOT .FIX C4 C5 C12 .MPYA .DVD
00104'050554 DICIS:     STA 2 ADR         ;SAVE ENTRY POINT
00105'102400            SUB 0 0
00106'024431            LDA 1 IFLG        ;PICK UP INTERRUPT FLAG
00107'044431            STA 1 FLGI        ;SAVE FOR LATER TEST
00110'006007$           JSR @.FLOT        ;FLOAT
00111'030547            LDA 2 ADR
00112'035000            LDA 3 0 2
00113'041400            STA 0 0 3         ;STORE IT
00114'045401            STA 1 1 3
00115'102400            SUB 0 0
00116'024420            LDA 1 IWORD       ;SAME WITH INTERRUPT WORD
00117'006007$           JSR @.FLOT
00120'030540            LDA 2 ADR
00121'035001            LDA 3 1 2
00122'041400            STA 0 0 3
00123'045401            STA 1 1 3
00124'020414            LDA 0 FLGI
00125'101005            MOV 0 0 SNR       ;FLAG SET?
00126'001002            JMP 2 2           ;NO:  RETURN
00127'126400            SUB 1 1           ;YES:
```

```
00130'044407           STA 1 IFLG       ;     CLEAR FLAG
00131'044405           STA 1 IWORD      ;     AND WORD
00132'020410           LDA 0 INTON
00133'061045           DOA 0 45         ;     AND ENABLE INTERRUPTS
00134'001002           JMP 2 2
00135'060000 ENINR:    3B2
00136'000000 IWORD:    0
00137'000000 IFLG:     0
00140'000000 FLGI:     0
00141'040001 DISIN:    1B1+1B15
00142'040002 INTON:    1B1+1B14
               ;
               ;CALL 174,J
               ;READ INTERRUPT WORD FROM INTERFACE
               ;
00143'020772 DICRI:    LDA 0 ENINR
00144'061045           DOA 0 45         ;ENABLE INTERRUPT REGISTER
00145'064445           DIA 1 45         ;READ INTERRUPT WORD
00146'060345           NIOP 45          ;DISABLE INTERRUPT REGISTER
00147'102400           SUB 0 0
00150'050510           STA 2 ADR
00151'006007$          JSR @.FLOT       ;FLOAT
00152'030506           LDA 2 ADR
00153'035000           LDA 3 0 2
00154'041400           STA 0 0 3        ;AND STORE
00155'045401           STA 1 1 3
00156'001001           JMP 1 2
               ;
               ;CALL 175:TRIGGER DIGITIZER READING
               ;
00157'020403 DICTD:    LDA 0 STDIG
00160'061045           DOA 0 45
00161'001000           JMP 0 2
00162'041002 STDIG:    1B1+1B6+1B14
               ;
               ;CALL 176,A(1)
               ;READ DIGITIZERS TO A(1)...A(4)
               ;RESULT IN THE RANGE 0...99999
               ;
00163'050475 DICRD:    STA 2 ADR        ;SAVE ENTRY POINT
00164'020462           LDA 0 DIOFF      ;CLEAR DIGITIZER READY
00165'061045           DOA 0 45
00166'020471           LDA 0 DINIT
00167'061045           DOA 0 45
00170'021000           LDA 0 0 2
00171'040450           STA 0 ADDV       ;ADDRESS OF RESULT
00172'030005$          LDA 2 C4
00173'050450           STA 2 CN1        ;4 DIGITIZERS
00174'034451           LDA 3 RCOM       ;POINT TO FIRST DIGIT
00175'024004$DSTRT:    LDA 1 C5
00176'044446           STA 1 CN2        ;5 DIGITS
00177'030450           LDA 2 STOC
00200'050403           STA 2 STORE      ;SET VARIABLE COMMAND
00201'075045 READ:     DOA 3 45
00202'064445           DIA 1 45         ;READ DIGIT
00203'000000 STORE:    0                ;STORE IT
00204'010777           ISZ STORE        ;NEXT STORAGE LOCATION
00205'175400           INC 3 3          ;POINT TO NEXT DIGIT
00206'014436           DSZ CN2          ;5 DONE?
00207'000772           JMP READ         ;NO:  TAKE NEXT
```

```
00210'054446            STA 3 DIGAD       ;YES: SAVE DIGIT ADDRESS
00211'024004$           LDA 1 C5          ;AND CONVERT TO BINARY
00212'044432            STA 1 CN2
00213'024442            LDA 1 LDC
00214'044403            STA 1 LOAD
00215'030003$           LDA 2 C12         ;CONSTANT BASE 10
00216'126400            SUB 1 1           ;0 IN AC1 AT FIRST PASS
00217'000000 LOAD:      0
00220'006002$           JSR @.MPYA        ;MULTIPLY BY 10 AND ADD DIGIT
00221'014776            DSZ LOAD          ;POINT TO NEXT LOWER DIGIT
00222'014422            DSZ CN2           ;5 DONE?
00223'000774            JMP LOAD          ;NO
00224'006007$           JSR @.FLOT        ;YES: FLOAT
00225'030414            LDA 2 ADDV        ;AND STORE
00226'041000            STA 0 0 2         ;        M S PART
00227'151400            INC 2 2
00230'045000            STA 1 0 2         ;        L S PART
00231'151400            INC 2 2
00232'050407            STA 2 ADDV        ;SAVE ADDRESS OF NEXT VALUE
00233'034423            LDA 3 DIGAD       ;RESTORE DIGIT ADDRESS
00234'014407            DSZ CN1           ;4 DIGITIZERS DONE?
00235'000740            JMP DSTRT         ;NO
00236'060345            NIOP 45
00237'030421            LDA 2 ADR
00240'001001            JMP 1 2
00241'000000 ADDV:      0
00242'000000 ADDP:      0
00243'000000 CN1:       0
00244'000000 CN2:       0
00245'100000 RCOM:      1B0
00246'040400 DIOFF:     1B1+1B7
00247'044445 STOC:      STA 1 LOC-STORE 1
00250'000005 LOC:       .BLK 5
00255'020435 LDC:       LDA 0 LOC+4-LOAD 1
00256'000000 DIGAD:     0
00257'160000 DINIT:     7B2
00260'000000 ADR:       0
                ;
                ;CALL 177,A(1),B(1)
                ;LOAD STEPWIDTH A(1)...A(4) AND POSITION B(1)...B(4)
                ;VALUES ALREADY MULTIPLIED BY 100 AT ENTRY
                ;AND IN THE RANGE 0...99999
                ;
00261'050777 DICLP:     STA 2 ADR         ;RETURN ADDRESS
00262'021000            LDA 0 0 2
00263'040756            STA 0 ADDV        ;ADDRESS OF STEPS
00264'021001            LDA 0 1 2
00265'040755            STA 0 ADDP        ;         OF POSITION
00266'102400            SUB 0 0
00267'040465            STA 0 EXADD       ;FIRST ADDRESS IN INTERFACE
00270'020005$           LDA 0 C4
00271'040752            STA 0 CN1         ;4 CIRCLES
00272'020765            LDA 0 DINIT
00273'061045            DOA 0 45          ;INITIALIZE TRANSFER
00274'020004$LP:        LDA 0 C5          ;CONVERT STEPWIDTH TO DECIMAL
00275'040747            STA 0 CN2         ;5 DIGITS
00276'020457            LDA 0 SST
00277'040412            STA 0 SSTOR       ;SET UP STORE COMMAND
00300'022741            LDA 0 @ADDV
00301'010740            ISZ ADDV
```

```
00302'026737           LDA 1 @ADDV      ;DIVIDEND F. P.
00303'010736           ISZ ADDV
00304'006006$          JSR @.FIX        ;CONVERT TO INTEGER
00305'030003$          LDA 2 C12        ;DIVISOR
00306'006001$          JSR @.DVD        ;DIVIDE BY 10: REMAINDER IN ACO
00307'101320           MOVZS 0 0        ;SWAP BYTES
00310'101120           MOVZL 0 0        ;SHIFT LEFT: DIGIT IN BITS 3-6 NOW
00311'000000 SSTOR:    0                ;STORE DIGIT
00312'102400           SUB 0 0          ;CLEAR ACO FOR NEXT STEP
00313'010776           ISZ SSTOR
00314'014730           DSZ CN2
00315'000771           JMP SSTOR-3
00316'020004$          LDA 0 C5         ;CONVERT POSITION TO DECIMAL
00317'040725           STA 0 CN2        ;5 DIGITS
00320'020436           LDA 0 SLD
00321'040414           STA 0 SLOAD      ;SET UP LOAD COMMAND
00322'022720           LDA 0 @ADDP
00323'010717           ISZ ADDP
00324'026716           LDA 1 @ADDP      ;DIVIDEND F. P.
00325'010715           ISZ ADDP
00326'006006$          JSR @.FIX        ;          INTEGER
00327'030003$          LDA 2 C12
00330'006001$          JSR @.DVD        ;DIVIDE BY 10
00331'101320           MOVZS 0 0
00332'101220           MOVZR 0 0
00333'101220           MOVZR 0 0
00334'101220           MOVZR 0 0        ;DIGIT IN BITS 7-10 NOW
00335'000000 SLOAD:    0
00336'163000           ADD 3 0          ;ADD STEP DIGIT
00337'034415           LDA 3 EXADD
00340'163000           ADD 3 0          ;ADD ADDRESS
00341'010413           ISZ EXADD        ;NEXT ADDRESS
00342'061045           DOA 0 45         ;SEND TO INTERFACE
00343'102400           SUB 0 0
00344'010771           ISZ SLOAD
00345'014677           DSZ CN2
00346'000762           JMP SLOAD-5
00347'014674           DSZ CN1
00350'000724           JMP LP
00351'060345           NIOP 45
00352'030706           LDA 2 ADR
00353'001002           JMP 2 2
00354'000000 EXADD:    0
00355'040737 SST:      STA 0 LOC-SSTOR 1
00356'034713 SLD:      LDA 3 LOC-SLOAD 1
                       ;
                       ;CALL 178: START MOTORS
                       ;PREREQUISITE: CALL 177
                       ;
00357'020403 DICDR:    LDA 0 DRBIT
00360'061045           DOA 0 45         ;START MOTORS
00361'001000           JMP 0 2          ;AND RETURN
00362'044200 DRBIT:    1B1+1B4+1B8
                       ;
                       ;CALL 271,T
                       ;MEASURE ONE POINT; MEASURING TIME T (1/100 SEC UNITS)
                       ;T MUST BE NEGATIV (LIMIT: -2^16)
                       ;PREREQUISITE: CALL 177
                       ;
00363'004413 DICMO:    JSR TTIME        ;TRANSFER TIME
```

```
00364'024410            LDA 1 ST1
00365'065045            DOA 1 45          ;STEPNUMBER -1
00366'020405            LDA 0 CLCNT
00367'061045            DOA 0 45          ;CLEAR COUNTER
00370'020405            LDA 0 FONE
00371'061045            DOA 0 45          ;START MEASUREMENT
00372'001001            JMP 1 2
00373'120000 CLCNT:     5B2
00374'037777 ST1:       37777
00375'040326 FONE:      1B1+3B9+1B11+3B14
00376'054643 TTIME:     STA 3 ADDV
00377'050661            STA 2 ADR         ;SAVE ENTRY
00400'035000            LDA 3 0 2
00401'021400            LDA 0 0 3
00402'025401            LDA 1 1 3         ;TIME F. P.
00403'006006$           JSR @.FIX
00404'066045            DOB 1 45
00405'030653            LDA 2 ADR
00406'002633            JMP @ADDV
                ;
                ;CALL 272,T,N
                ;MEASURE INTEGRAL; STEP TIME T, STEP NUMBER N
                ;T: SEE CALL 271
                ;N MUST BE NEGATIVE (LIMIT: -2^12)
                ;PREREQUISITE: CALL 177 OR CALL 271
                ;
00407'004767 DICMI:     JSR TTIME         ;TRANSFER TIME
00410'035001            LDA 3 1 2         ;ADDRESS OF STEP NUMBER
00411'021400            LDA 0 0 3
00412'025401            LDA 1 1 3         ;STEP NUMBER F. P.
00413'006006$           JSR @.FIX
00414'020411            LDA 0 B1
00415'107000            ADD 0 1           ;CLEAR BITS 0,1
00416'065045            DOA 1 45          ;TRANSFER STEP NUMBER
00417'020754            LDA 0 CLCNT
00420'061045            DOA 0 45          ;CLEAR COUNTER
00421'020405            LDA 0 FINT
00422'061045            DOA 0 45          ;START MEASUREMENT
00423'030635            LDA 2 ADR
00424'001002            JMP 2 2
00425'040000 B1:        1B1
00426'040222 FINT:      1B1+1B8+1B11+1B14
                ;
                ;CALL 273,P
                ;READ COUNT; NUMBER OF PULSES: P
                ;PREREQUISITE: CALL 271 OR CALL 272
                ;
00427'050631 DICRC:     STA 2 ADR
00430'020412            LDA 0 CLTIM       ;RESET TIME FLAG
00431'061045            DOA 0 45
00432'061445            DIB 0 45
00433'066445            DIC 1 45          ;COUNT INTEGER
00434'006007$           JSR @.FLOT        ;FLOAT
00435'030623            LDA 2 ADR
00436'035000            LDA 3 0 2
00437'041400            STA 0 0 3
00440'045401            STA 1 1 3         ;STORE
00441'001001            JMP 1 2
00442'040050 CLTIM:     1B1+1B10+1B12
                ;
```

```
                ;CALL 274,F
                ;SET FILTERS; FILTERWORD F
                ;
00443'050615 DICFI:   STA 2 ADR
00444'035000          LDA 3 0 2
00445'021400          LDA 0 0 3
00446'025401          LDA 1 1 3
00447'006006$         JSR @.FIX
00450'067045          DOC 1 45
00451'030607          LDA 2 ADR
00452'001001          JMP 1 2
                ;
                ;CALL 279: WRITE 2 END OF FILE MARKS
                ;CALL IS ONLY TO BE USED TO CLOSE AN OUTPUT FILE
                ;AFTER A COMPUTER MALFUNCTION!
                ;
00453'060277 DICWO:   INTDS             ;DISABLE INTERRUPTS
00454'020412          LDA 0 P60
00455'061122          DOAS 0 MTA        ;WRITE EOF
00456'063522          SKPBZ MTA         ;WAIT FOR END
00457'000777          JMP .-1
00460'061122          DOAS 0 MTA        ;2ND EOF
00461'063522          SKPBZ MTA
00462'000777          JMP .-1
00463'060222          NIOC MTA
00464'060177          INTEN             ;ENABLE INTERRUPTS
00465'001000          JMP 0 2
00466'000060 P60:     60
                ;SCRATCH LOCATIONS
00467'000020 B:       .BLK 20
                      .END
```

Appendix IV: Error messages

******* I / O E R R O S *******

```
  0 ILLEGAL CHANNEL
 -1 ILLEGAL FILE NUMBER
 -2 ILLEGAL SYSTEM COMMAND
 -3 ILLEGAL COMMAND FOR DEVICE
 -4 NOT A SAVED FILE
 -5 FILE ALREADY EXISTS
 -6 END OF FILE
 -7 READ-PROTECTED FILE
 -8 WRITE-PROTECTED FILE
 -9 FILE ALREADY EXISTS
-10 FILE NOT FOUND
-11 PERMANENT FILE
-12 ATTRIBUTES PROTECTED
-13 FILE NOT OPENED
-14 SWAPPING DISK ERROR - PROGRAMM LOST
-15
-16
-17 UFT IN USE
-18 LINE LIMIT
-19 IMAGE NOT FOUND
-20 PARITY
-21 PUSH LIMIT
-22 STORAGE OVERFLOW
-23 NO FILE SPACE
-24 READ ERROR
-25 SELECT STATUS e.g. unit not ready, or write protected
-26 START ADRESS
-27 STORAGE PROTECT
-28
-29 DIFFERENT DIRECTORIES
-30 DEVICE NAME
-31 OVERLAY NUMBER
-32 OVERLAY FILE ATTRIBUT
-33 SET TIME
-34 NO TCB'S
-35
-36 SQUASH FILE
-37 DEVICE ALREADY EXISTS
-38 INSUFFICIENT CONTIGUOUS BLOCKS
-39 QTY
-40 TASK QUEUE TABLE
-41 NO MORE DCB'S
-42 DIR SPECIFIER
-43 DIR SPECIFIER
-44 DIR TOO SMALL
-45 DIR DEPTH
-46 DIR IN USE
-47 LINK DEPTH
-48 FILE IN USE
-49 TASK ID
```

-50 COMMON SIZE
-51 COMMON USAGE
-52 FILE POSITION
-53 DATA CHANAL MAP
-54 DIR NOT INITALIZED
-55 NO DEFAULT DIR
-56 FQ ALREADY ACTIVE
-57 PARTITION SET
-58 INSUFFICIENT ARGUMENTS
-59 ATTRIBUTS
-60 NO DEBUG
-61 NO CONTINUATION ADRESS
-62 NO START ADRESS
-63 CHECKSUM
-64 NO SOURCE FILE
-65 NOT A COMMAND
-66 BLOCK TYPE
-67 NO FILES MATCH
-68 PHASE
-69 EXCESS ARGUMENTS
-70
-71
-72
-73
-74
-75
-76
-77
-78
-79
-80
-81
-82
-83
-84
-85
-86
-87
-88
-89
-90
-91
-92
-93
-94
-95
-96
-97
-98
-99

--- STANDARD - ERRORS ---

```
 0 ARITHMETIC OPERATORS IN ILLEGAL COMBINATION
 1 INVALID CHARACTER
 2 SYNTAX
 3 [MAT] READ/DATA TYPES INCONSISTENT
 4 INTERNAL SYSTEM FAULT
 5 INVALID STATEMENT NUMBER
 6 ATTEMPT TO DEFINE MORE THAN 93 VARIABLES
 7 ILLEGAL COMMAND (FROM A FILE)
 8 PAGE OR TAB SPECIFICATION ILLEGAL
 9 ILLEGAL RESERVED FILE NAME
10 RESERVED FILE IN USE
11 PARENTHESES NOT PAIRED
12 ILLEGAL COMMAND
13 STATEMENT NUMBER MISSING
14 INSUFFICIENT STORAGE TO ENTER STATEMENT
15 UNSATISFIED [MAT] READ
16 ARITHM. OVERFLOW, UNDERFLOW OR DIVIDE BY ZERO
17 UNDEFINED VARIABLE
18 GOSUB NESTING LIMIT
19 RETURN - NO GOSUB
20 FOR NESTING LIMIT
21 FOR - NO NEXT
22 NEXT - NO FOR
23 INSUFF. STORAGE FOR A VARIABLE OR AN ARRAY
24 LINE NUMBER MISSING
25 MAT  OR  PRU  NOT IN SYSTEM
26 INSUFFICIENT STORAGE TO LOAD SAVE-FILE
27 INVALID FILE REFERENCE
28 ARRAY EXCEEDS INITIAL DIMENSION
29 EXPRESSION TO COMPLEX FOR EVALUATION
30 INVALID FILE MODE
31 SUBSCRIPT EXCEEDS DIMENSION
32 UNDEFINED USER FUNCTION
33 FUNCTION NESTING LIMIT
34 FUNCTION ARGUMENT
35 ILLEGAL EDIT MASK
36 PRINT LINE GREATER THAN PAGE WIDTH
37 USER SUBROUTINE (SBRTB) NOT FOUND
38 UNDIMENSIONED STRING
39 REDUNDANT MATRIX SPECIFICATION
40 MATRICES UNEQUAL SIZE
41 MATRIX HAS ONLY ONE DIMENSION
42 FILE ALREADY OPEN
43 MATRIX NOT SQUARED
44 FILE NOT OPEN
45 NOT A SAVE-FILE
46 INCORRECT RESPONSE TO [MAT] INPUT
47 FILE OPENED IN WRONG MODE
48
49
```

```
50
51
52
53
54
55
56
57
58
59
60
61
62
63
64
65
66
67
68
69
70
71
72
73
74
75
76
77 SOS - POWER-FAIL
78
79
80
81
82
83
84
85
86
87
88
89
90
91
92
93
94
95
96
97
98 GERAET BELEGT (MULTI-USER-BASIC)
99 INTERRUPTSYSSTEM KAPUTT
```